Catalogue GB-MC-A1

Snap-action Microswitches & Limit switches

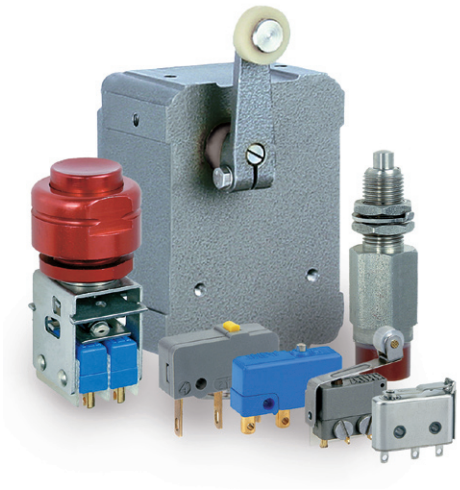

PETERCEM

Electrotechnical switch solutions for harsh environments

Snap-action Microswitches & Limit Switches

PETERCEM

Summary

Hermetically sealed Microswitches

Protected Microswitches

Waterproof Microswitches

Limit Switches

Other Products

T3 Hermetically sealed Microswitches

PETERCEM

Application

Microswitch for harsh environment: humidity, corrosion, shocks and vibrations, temperature requirements…

- Operating temperature: -55 °C ... +150 °C.
- Rated breaking capacity: from few mA up to 5 A (depending on voltage and electrical load type).
- Mechanical life: 200 000 cycles (except Microswitches with added overtravel lever actuator where the life cycle depends on the overtravel applied to the product).

Description

Encapsulated snap-action switch.

- Stainless steel casing.
- Inert gas filled switching chamber.
- Gold plated silver contacts.
- Mounting holes for M2 screws.
- Terminals: – solder terminals,
  – 0.38 mm² (AWG 22) leadwires(1), FEP insulation, axial or side outputs .

(1) Compliant to AIR 4524 specification ; NF L 52-125A Category B of 1971 - lightweight cables. Interchangeability: AICMA No 5116 recommendation of February 1961.

Approvals and Compliance to Standards

French Air Ministry Approval as per letter 44.759/STPA/CIN1 dated 26 October 1987.
Approval according to standards: **AIR 8459, NF C 93-415**.
AIR equipment sheets No: 6.552.221 - 6.552.222 - 6.552.223 - 6.552.224.

Main compliance or performance equivalences with **MIL-PRF-8805** standard requirements.

Environmental characteristics

(For other test results, please contact us **)**

Salt spray resistance	96 h
Humidity	93% relative humidity, +40°C duration 1000h
Mechanical shocks resistance	100 g - duration 6 ms (pulse shape = 1/2 sine) 18 shocks (3/direction, both of 3 orthogonal axis)
Sinusoidal vibrations resistance	10 _ 2000 Hz, 50 g in each of 3 orthogonal axis
Random vibrations	10 _ 2000 Hz, 0.15 g² / Hz in each of 3 orthogonal axis
Operating temperature	-55°C +150°C

Mechanical characteristics

Characteristics according to the actuating point (arrow) indicated on dimension drawings.

Hermetically sealed Microswitches		**T3LD...**	**T3LGD...**	**T3LD60...**
Max. operating force	**N**	6	5	6
Min. release force	**N**	1	1	1
Pretravel	**mm**	0.30 ... 0.55	0.35 ... 0.70	0.50 ... 0.70
Differential movement	**mm**	0.05 ... 0.35	0.05 ... 0.45	0.05 ... 0.40
Min. overtravel (1)	**mm**	0.20	0.20	0.60
Max. full overtravel authorised force	**N**	13	8.5	13

(1) Do not exceed this value in use.

Interaction between overtravel and mechanical life for **T3LD60...** types

Overtravel	**mm**	0.60	0.90	1.20
Mechanical service life	**cycles**	5 000	2 500	1 000

Electrical characteristics

Ratings (electrical load on one throw only)		**30 ... 48 V d.c.**	**6 V d.c.**	**220 V a.c. - 50 Hz**
– resistive load	**A**	5 A	10 mA	2 A
– inductive load	**A**	1.5 A (L/R ≤ 5 ms)	–	1 A (Cos φ ≥ 0.5)
Electrical service life	**cycles**	200 000	200 000	100 000
		U = 28 V d.c. for "AIR" approval	"AIR" approval	out of "AIR" approval
Min. switched current.	**mA**	5	5	5
Changeover time	**ms**	≤ 10	≤ 10	≤ 10
Contact resistance	**mΩ**	≤ 25 mΩ under 6 V d.c. – 100 mA according to MIL-PRF-8805 (As new, wires or cable not included)		
Rigidité diélectrique (50 Hz - 1 mn)				
– between terminals	**V a.c.**	500		
– between all terminals and earth (ground)	**V a.c.**	1200		
Insulation resistance	**MΩ**	≥ 1000 MΩ under 500 V d.c. (at 23 °C with < 80 % relative humidity)		

T3 Hermetically sealed Microswitches

PETERCEM

Specific Products - Contact us for more information ; data sheet on request.

- **T3LDSH** Microswitch for operating temperatures up to +260 °C.
- **T3LDF-R9** Microswitch with 0.8 mm² (≃ AWG 18) leadwires "EPR" insulation is designed for use in irradiated areas. Some Limit switches for nuclear power plant use include this variant.

Ordering Details

Standard leadwire length = 0.5 m ; other length on request.

Terminals	P/N	Weight (1 piece) kg
Microswitch with straight lever actuator		
Solder terminals	**T3LDS**	0.005
Wired terminals	**T3LDF**	0.017
Wired terminals side outputs	**T3LDFL**	0.017
Microswitch with roller lever actuator		
Solder terminals	**T3LGDS**	0.006
Wired terminals	**T3LGDF**	0.018
Wired terminals side outputs	**T3LGDFL**	0.018
Microswithc with lever control "overtravel absorber"		
Solder terminals	**T3LD60S**	0.006
Wired terminals	**T3LD60F**	0.018
Wired terminals side outputs	**T3LD60FL**	0.01

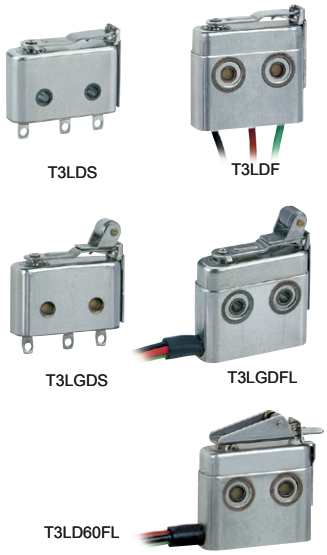

Circuit diagram

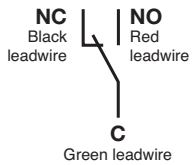

Connection type

Solder terminals **"S"**

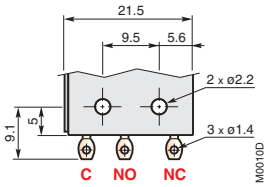

Wired terminals **"F"**

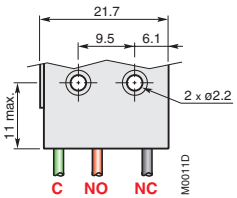

Wired terminals side outputs **"FL"**

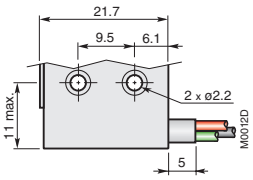

Dimensions

M2 screws recommended tightening torque: 0.25 to 0.30 Nm. Warning: do not insert fan-type washer in contact with the Microswitch.

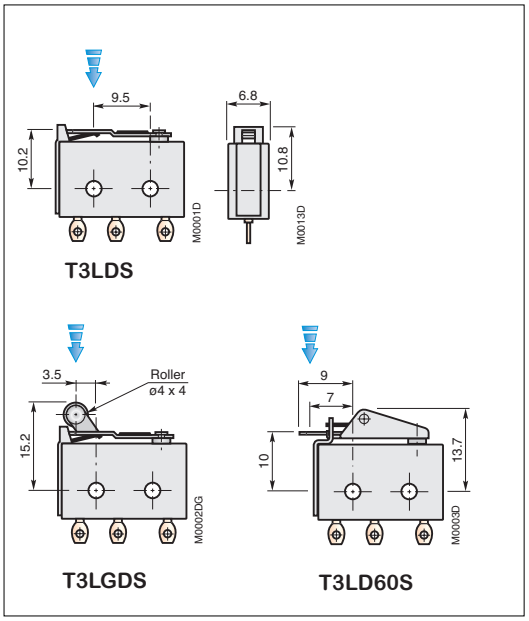

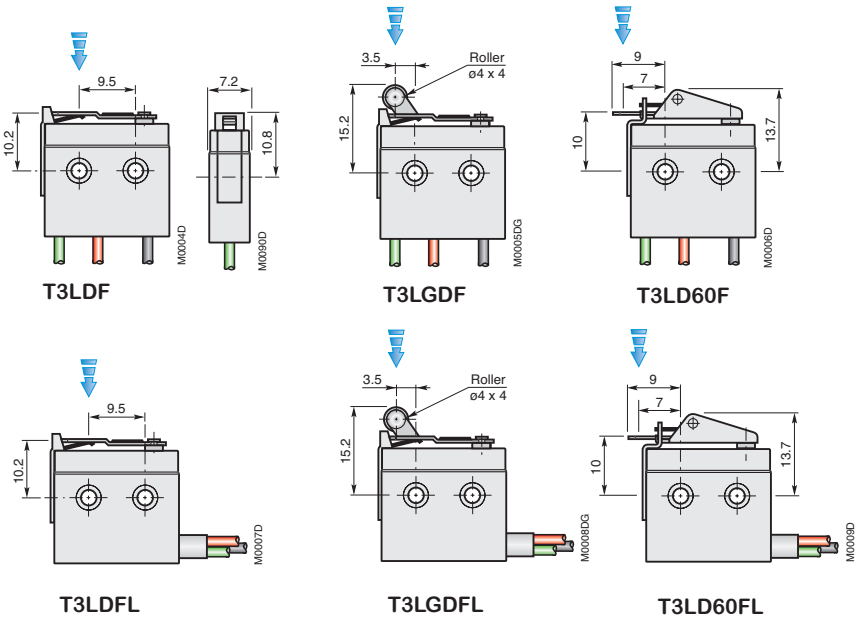

G3 Hermetically sealed Microswitches

PETERCEM

Application

Microswitch for harsh environment: humidity, corrosion, shocks and vibrations, temperature requirements…

- Operating temperature: -55 °C ... +150 °C.
- Rated breaking capacity: from few mA up to 5 A (depending on voltage and electrical load type).
- Mechanical life: 200 000 cycles.

Description

Sensitive, encapsulated snap-action switch.

- Stainless steel casing.
- Inert gas filled switching chamber.
- Gold plated silver contacts.
- Mounting holes for M2 screws.
- Terminals: – solder terminals,
  – 0.38 mm2 (AWG 22) leadwires(1) , FEP insulation, axial or side outputs. (2 options in this case)
  (1) Compliant to AIR 4524 specification ; NF L 52-125A Category B of 1971 - lightweight cables. Interchangeability: AICMA No 5116 recommendation of February 1961

Approvals and Compliance to Standards

French Air Ministry Approval as per letter 44.047/STPA/CIN.1/6 dated 7 October 1983.
Approval according to standards: **AIR 8459, NF C 93-415.**
AIR equipment sheets No: 6.552.206.
Main compliance or performance equivalences with **MIL-PRF-8805** standard requirements.

Environmental characteristics

(For other test results, please contact us **)**

Salt spray resistance	96 h
Humidity	93% relative humidity, +40°C duration 1000h
Mechanical shocks resistance	100 g - duration 6 ms (pulse shape = 1/2 sine) 18 shocks (3/direction, both of 3 orthogonal axis)
Sinusoidal vibrations resistance	10 _ 2000 Hz, 50 g in each of 3 orthogonal axis
Random vibrations	10 _ 2000 Hz, 0.30 g^2 / Hz in each of 3 orthogonal axis
Operating temperature	-55°C +150°C

Mechanical characteristics

Characteristics according to the actuating point (arrow) indicated on dimension drawings.

Hermetically sealed Microswitches		**G3A1...**	**G3L11...**	**G3BS...**	**G3P30...**
Max. operating force	**N**	10	15	12	12
Min. release force	**N**	1.5	2.0	1.5	1.5
Pretravel	**mm**	0.12 ... 0.25	0.6 max.	0.12 ... 0.50	0.12 ... 0.50
Max. differential movement	**mm**	0.05	0.08	0.05	0.05
Min. overtravel (1)	**mm**	0.08	0.40	3.0	3.0
Max. full overtravel authorised force	**N**	25	25	60	60

Electrical characteristics

Ratings (electrical load on one throw only)		**30 ... 48 V d.c.**	**6 V d.c.**	**220 V a.c. - 50 Hz**
– resistive load	**A**	5 A	10 mA	2 A
– inductive load	**A**	1.5 A (L/R ≤ 5 ms)	–	1 A (Cos φ ≥ 0.5)
Electrical service life	**cycles**	200 000 U = 30 V d.c. for "AIR" approval	200 000 out of "AIR" approval	100 000 out of "AIR" approval
Min. switched current	**mA**	5	5	5
Changeover time	**ms**	≤ 10	≤ 10	≤ 10
Contact resistance	**mΩ**	≤ 25 mΩ under 6 V d.c. – 100 mAaccording to MIL-PRF-8805 (As new, wires or cable not included)		
Dielectric strength (50 Hz - 1 mn)				
– between terminals	**V a.c.**	500		
– between all terminals and earth (ground)	**V a.c.**	1500		
Insulation resistance	**MΩ**	≥ 100 MΩ sous 500 V d.c. (at 23 °C with < 80 % relative humidity)		

Specific Products - Contact us for more information ; data sheet on request.

- **G3A1SH** Microswitch for operating temperatures up to +250 °C.

Ordering Details

Standard leadwire length = 0.5 m ; other length on request.
For wired terminals side outputs "**FL**" and "**FLL**", specify, if necessary, required leadwires orientation. See data sheets.

Terminals	P/N	Weight (1 piece) kg
Microswitch with pin actuator, without mounting interface		
Solder terminals	**G3A1S**	0.005
Wired terminals	**G3A1F**	0.017
Wired terminals side outputs (standard potting)	**G3A1FL**	0.017
Wired terminals side outputs (longest potting)	**G3A1FLL**	0.018
Microswitch with pin actuator, side flange mounting		
Solder terminals	**G3A1CS**	0.006
Wired terminals	**G3A1CF**	0.018
Wired terminals side outputs (standard potting)	**G3A1CFL**	0.018
Wired terminals side outputs (longest potting)	**G3A1CFLL**	0.019
Microswitch with flexible lever actuator, side flange mounting		
Solder terminals	**G3L11CS**	0.007
Wired terminals	**G3L11CF**	0.019
Wired terminals side outputs (standard potting)	**G3L11CFL**	0.019
Wired terminals side outputs (longest potting)	**G3L11CFLL**	0.020
Microswitch with flexible roller lever actuator, side flange mounting		
Solder terminals	**G3L11GCS**	0.007
Wired terminals	**G3L11GCF**	0.019
Wired terminals side outputs (standard potting)	**G3L11GCFL**	0.019
Wired terminals side outputs (longest potting)	**G3L11GCFLL**	0.020
Microswitch with pin actuator, front flange mounting		
Solder terminals	**G3A1PS**	0.006
Wired terminals	**G3A1PF**	0.018
Wired terminals side outputs (standard potting)	**G3A1PFL**	0.018
Wired terminals side outputs (longest potting)	**G3A1PFLL**	0.019
Microswitch with pin actuator, M14 threaded body		
Solder terminals	**G3A1VS**	0.014
Wired terminals	**G3A1VF**	0.026
Wired terminals side outputs (standard potting)	**G3A1VFL**	0.026
Wired terminals side outputs (longest potting)	**G3A1VFLL**	0.027
Microswitch with telescopic plunger actuator; M8 threaded body		
Solder terminals	**G3P30S**	0.014
Wired terminals	**G3P30F**	0.026
Wired terminals side outputs (standard potting)	**G3P30FL**	0.026
Wired terminals side outputs (longest potting)	**G3P30FLL**	0.027
Microswitch with telescopic ball bearing plunger actuator; M8 threaded body		
Solder terminals	**G3BS**	0.015
Wired terminals	**G3BF**	0.027
Wired terminals side outputs (standard potting)	**G3BFL**	0.027
Wired terminals side outputs (longest potting)	**G3BFLL**	0.028
Microswitch with telescopic roller plunger actuator; M12 threaded body		
Solder terminals	**G3P30GS**	0.028
Wired terminals	**G3P30GF**	0.040
Wired terminals side outputs (standard potting)	**G3P30GFL**	0.040
Wired terminals side outputs (longest potting)	**G3P30GFLL**	0.041


G3A1S


G3L11GCS


G3A1VS


G3P30F


G3BS

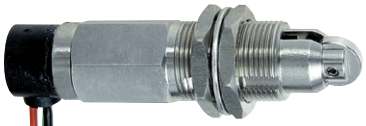
G3P30GFL

Circuit diagram Raccordement

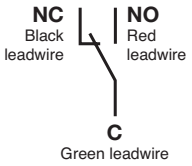

- Solder terminals

"S"

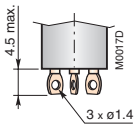

- Wired terminals

"F"

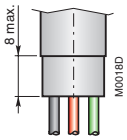

- Wired terminals side outputs

(standard potting)

"FL"

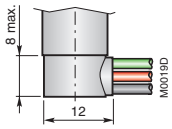

- Wired terminals side outputs

(longest potting)

"FLL"

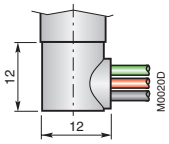

Leadwires are right oriented in standard configuration.
Consult us for other orientations

Dimensions - Cutout

Solder terminal devices are shown on below drawings

G3A1...

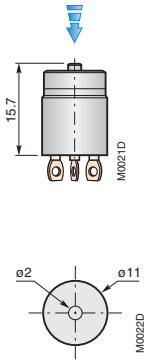

G3A1P...
Mounting holes for M2.5 screws

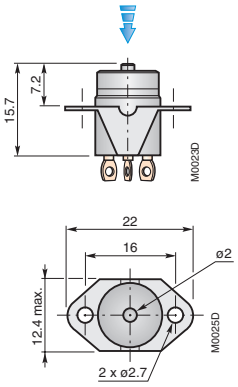

G3A1C...
Mounting holes for M3 screws.

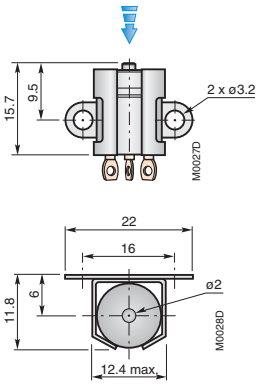

G3L11GC ...
Mounting holes for M3 screws

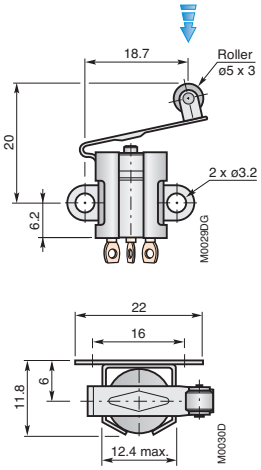

G3L11C ...
Mounting holes for M3 screws

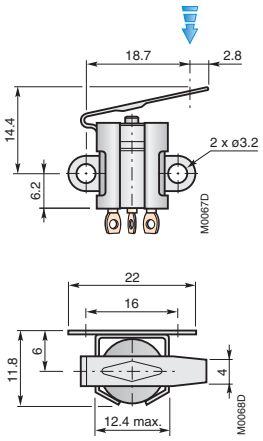

G3A1V ...
Panel mounting by threaded bushing and nuts
Recommended tightening torque: 10 Nm

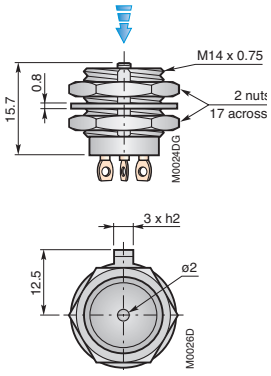

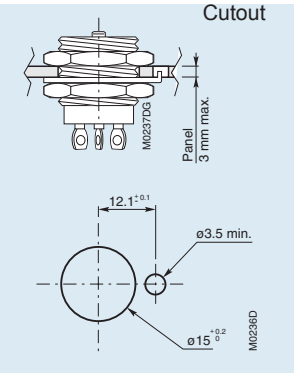

Dimensions - Cutout (continued)

G3B ...
Panel mounting by threaded bushing and nuts
Recommended tightening torque: 4 Nm

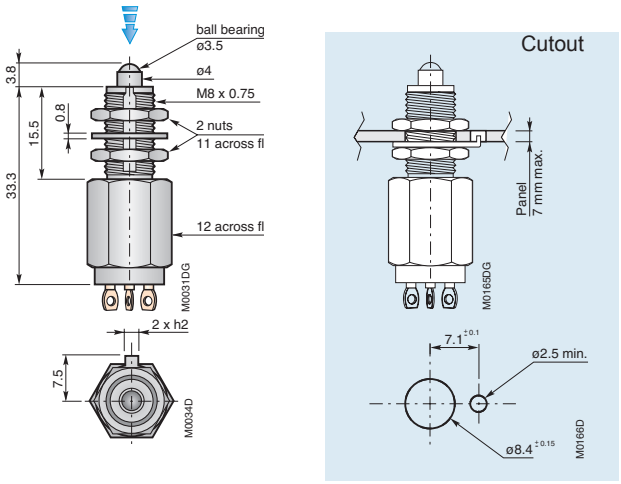

G3P30 ...
Panel mounting by threaded bushing and nuts
Recommended tightening torque: 4 Nm.

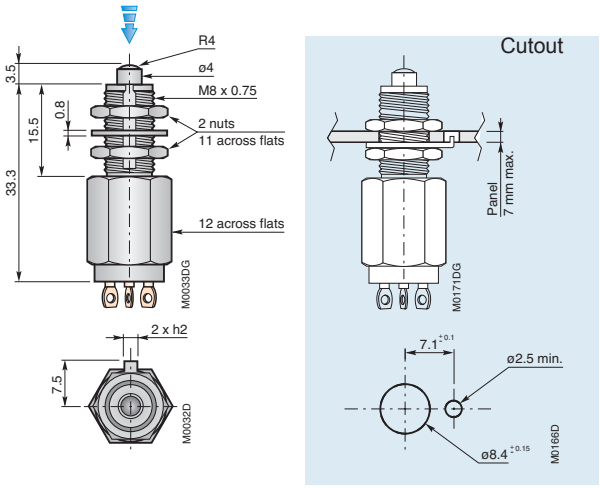

G3P30G ...
Panel mounting by threaded bushing and nuts
Recommended tightening torque: 9 Nm

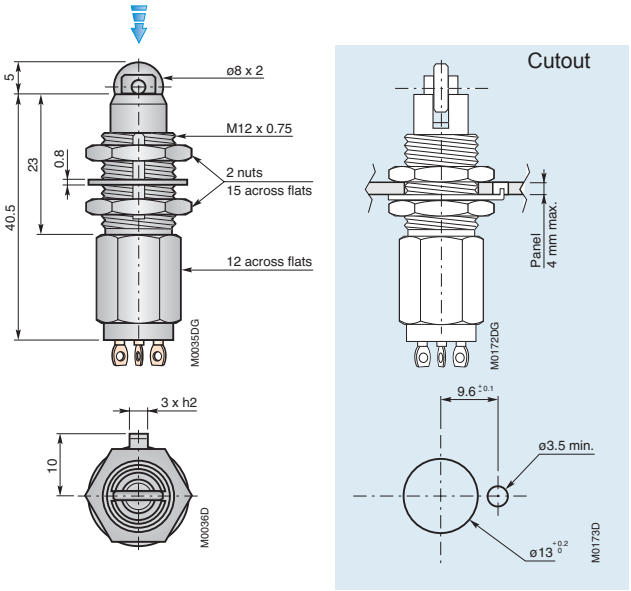

Panel cutout and keying according to 1SBC148000M1700 document on request.

Application

Microswitch for severe industrial environment: humidity, corrosion, temperature…

- Operating temperature:
  - – screw terminals: -25 ... +85 °C general use
    -55 ... +155 °C extended temperature range design (**R...V-1** types)
  - – wired terminals: -30 ... +120 °C general use
    -55 ... +155 °C extended temperature range design (**R...F50-1** types)
- Ratings (220 V a.c. – 50 Hz voltage): 2.5 A (standard version) or 5 A.
- Mechanical service life: 100 000 cycles.

Description

Encapsulated snap-action switch.

- Brass tinned casing.
- Inert gas filled switching chamber.
- Gold plated silver contacts.
- Mounting by way of screws or threaded bushing according to product design.
- Terminals: – screw terminals,
  – 1 mm² (AWG 17) leadwires, Reticulated synthetic rubber insulation - general use
  – 0.93 mm² (AWG 18) leadwires* , FEP insulation - extended temperature range design "**-1**" series

  * Compliant to AIR 4524 ; NF L 52-125A Category B of 1971 - lightweight cables ; Interchangeability: AICMA No 5116 recommendation of February 1961.

Approvals and Compliance to Standards

French Air Ministry Approval based on standard: **AIR 8459.**
AIR equipment sheets No: 6.552.200, 6.552.201, 6.552.202, 6.552.203, 6.552.210.
Main compliance or performance equivalences with **MIL-PRF-8805** standard requirements**.**

Environmental characteristics

(For other test results, please contact us **)**

Salt spray resistance	96 h
Humidity	93% relative humidity, +40 °C duration 168 hours (7 days)
Mechanical shocks resistance	50g - duration 11ms (pulse shape = 1/2 sinus) 18 shocks (3/direction, both of 3 orthogonal axis)
Sinusoidal vibrations resistance	10 _ 2000 Hz, 10 g in each of 3 orthogonal axis
Pressure stress	5 bars absolute

Mechanical characteristics

Characteristics according to the actuating point (arrow) indicated on dimension drawings.

Hermetically sealed Microswitches		**RLDV... / RLDF50... R5LDV... / R5LDF50...**	**RLDGV... / RLDGF50... R5LDGF50...**	**RP32F50... R5P32F50...**	**RP32GF... R5P32GF...**
Max. operating force	**N**	8.75	7.50	9.0	9.0
Min. release force	**N**	0.6 x Operating force	0.6 x Operating force	0.5 x Operating force	0.5 x Operating force
Pretravel max.	**mm**	1.50	1.70	1.70	1.70
Max. differential movement	**mm**	0.50	0.60	0.60	0.60
Min. overtravel (1)	**mm**	0.40	0.50	2.5	3.0
Max. full overtravel authorised force	**N**	18	15	–	–

(1) Do not exceed this value in use

Electrical characteristics

Ratings (electrical load on one throw only)			**30 ... 48 V d.c.**	**115 V d.c.**	**220 V a.c. - 50 Hz**
Version 2.5 A	– resistive load	**A**	3	1	2.5
	– inductive load	**A**	1.8 A (L/R ≤ 40 ms)	0.5 A (L/R ≤ 40 ms)	1.5 A (Cos φ ≥ 0.3)
Version 5 A	– resistive loadif	**A**	–	3	5
	– inductive load	**A**	–	0.5 A (L/R ≤ 40 ms)	2.5 A (Cos φ ≥ 0.3)
Electrical service life		**cycles**	100 000	100 000	100 000
Min. switched current		**mA**	5	5	5
Changeover time		**ms**	≤ 15	≤ 15	≤ 15
Contact resistance		**mΩ**	≤ 50 mΩ under 6 V d.c. – 100 mA according to MIL-S-8805 (As new, wires or cable not included)		
Dielectric strength (50 Hz - 1 mn)					
– between terminals		**V a.c.**	500		
– between all terminals and earth (ground)		V a.c.	1500		
Insulation resistance		MΩ	≥ 100 MΩ under 500 V d.c. (at 23 °C with < 80 % relative humidity)		

Specific Products - Contact us for more information ; data sheet on request

Many standard products (with "**-R6**", "**-R8**" or "**-R9**" termination) are compliant with nuclear environment use. Insulating material of used leadwires accept 2.10^6 Gy (2.10^8 rad) irradiation integrated dose.

In most cases, these devices are included in EDF (French Electricity Supply Board) certified limit switches. They have passed number of specific and severe tests.

Ordering details

Standard leadwire length = 0.5 m ; other length on request.
Rated breaking capacity (220 V - 50 Hz)

A.	Terminals	P/N	Weight (1 piece) kg
Microswitch with lever actuator			
2.5	Screw terminals	**RLDV**	0.035
		RLDV-1	0.035
	Wired terminals	**RLDF50**	0.065
		RLDF50-1	0.065
5	Screw terminals	**R5LDV**	0.035
		R5LDV-1	0.035
	Wired terminals	**R5LDF50**	0.065
		R5LDF50-1	0.065
Microswitch with roller lever actuator			
2.5	Screw terminals	**RLDGV**	0.040
		RLDGV-1	0.040
	Wired terminals	**RLDGF50**	0.070
		RLDGF50-1	0.070
5	Wired terminals	**R5LDGF50**	0.070
		R5LDGF50-1	0.070
Microswitch with telescopic plunger actuator; M12 threaded bushing			
2.5	Wired terminals	**RP32F50**	0.110
		RP32F50-1	0.110
5	Wired terminals	**R5P32F50**	0.110
		R5P32F50-1	0.110
Microswitch with telescopic roller plunger actuator; M12 threaded bushing			
2.5	Wired terminals	**RP32GF50**	0.120
		RP32GF50-1	0.120
5	Wired terminals	**R5P32GF50**	0.120
		R5P32GF50-1	0.120

Reminder: On above table, **R…-1** product codes refer to extended temperature range devices.


RLDV

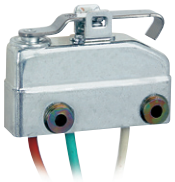
RLDF50


RLDGF50

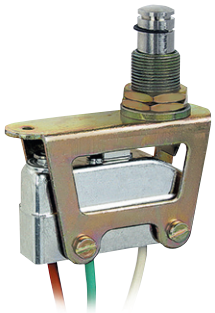
RP32F50

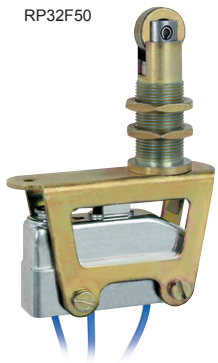
RP32GF50-1

Circuit diagram

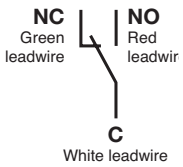

Connection

- **M3 Screw terminals** - Recommended tightening torque: 0.6 to 1 Nm

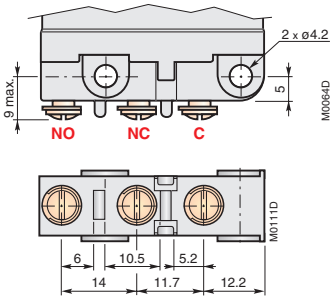

- **Wired terminals**

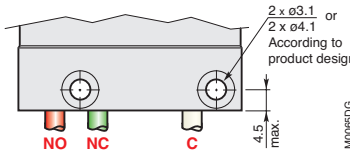

Dimensions

RLDV, RLDV-1, R5LDV, R5LDV-1
Mounting holes for M4 screws
Recommended tightening torque: 1.6 to 2 Nm

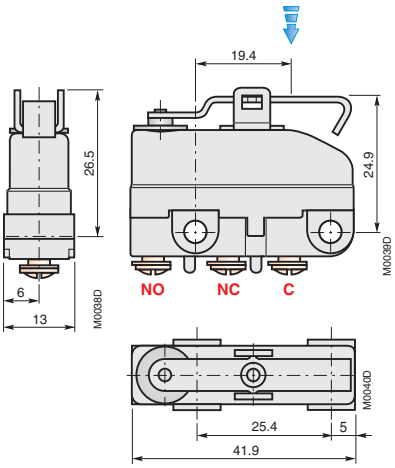

RLDGV, RLDGV-1
Mounting holes for M4 screws
Recommended tightening torque: 1.6 to 2 Nm

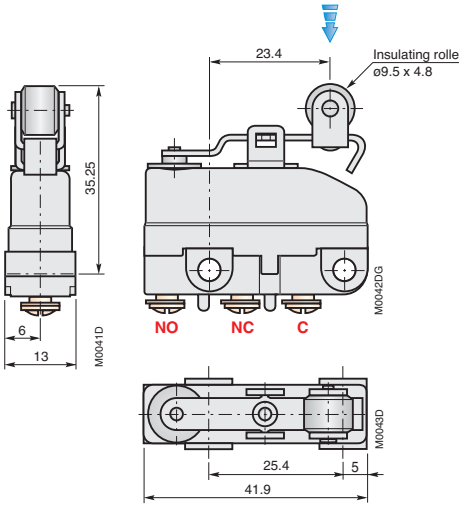

RLDF50, R5LDF50
Mounting holes for M3 screws.
Recommended tightening torque: 2 Nm.

RLDF50-1, R5LDF50-1
Mounting holes for M4 screws.
Recommended tightening torque: 4 Nm.

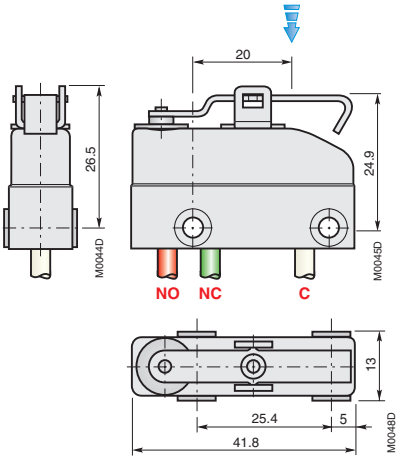

RLDGF50, R5LDGF50
Mounting holes for M3 screws.
Recommended tightening torque: 2 Nm

RLDGF50-1, R5LDGF50-1
Mounting holes for M4 screws.
Recommended tightening torque: 4 Nm

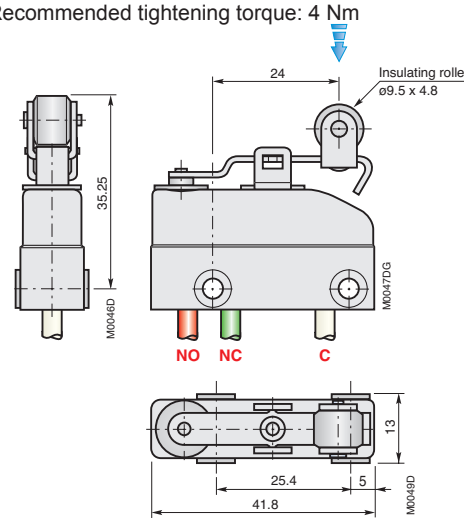

General mounting instruction FPTM 88017 on request

Dimensions (continued)

RP32F50, RP32F50-1, R5P32F50, R5P32F50-1
Panel mounting by threaded bushing and nuts. Panel hole (recommended) Ø 13 $^{+\ 0.2\ /\ 0}$
M12 nuts recommended tightening torque: 5 Nm

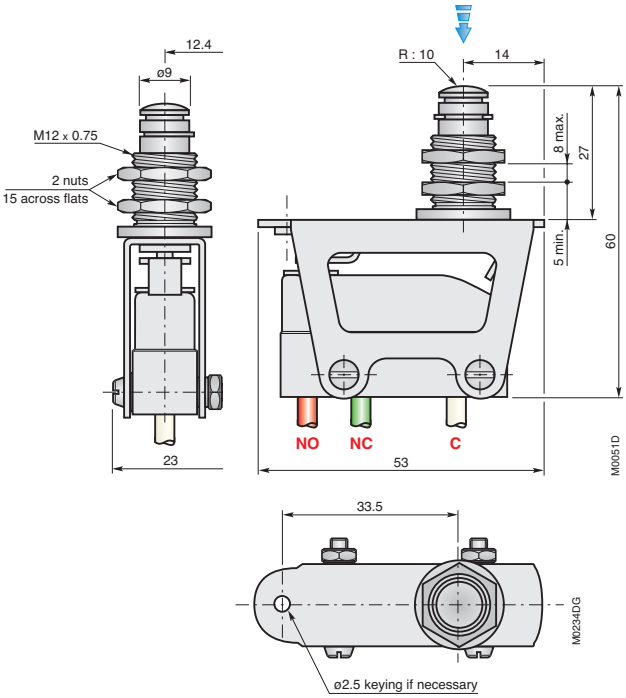

RP32GF50, RP32GF50-1, R5P32GF50, R5P32GF50-1
Panel mounting by threaded bushing and nuts. Panel hole (recommended) Ø 13 $^{+0.2\ /\ 0}$
M12 nuts recommended tightening torque: 5 Nm.

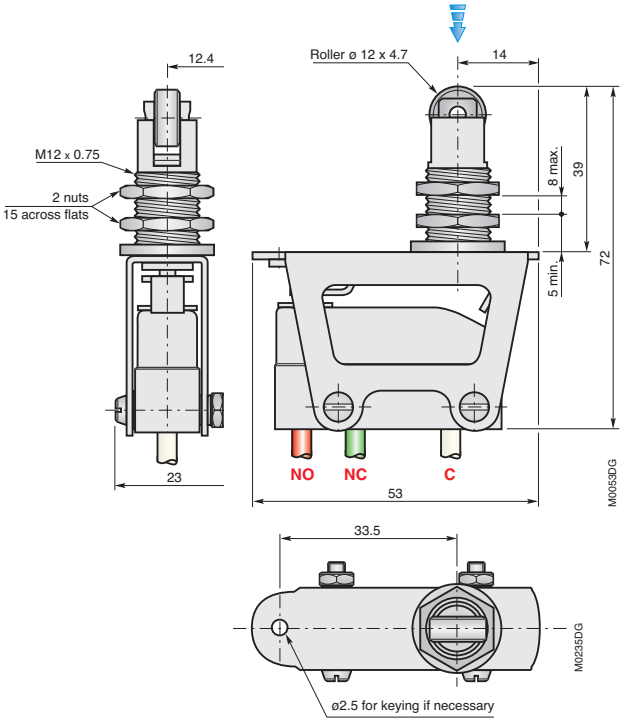

General mounting instruction FPTM 88017 on request

Z3 Subminiature Microswitches

PETERCEM

Application

Subminiature Microswitch for severe environment: shocks and vibrations, temperature…

- Operating temperature: -55 °C ... +150 °C
- Rated breaking capacity: from few mA up to 4 A.
- Degree of protection: IP40 ; IP54 (except terminals).
- Mechanical service life: 500 000 cycles

Description

Snap action switch - unsealed.

- Plastic casing : PPS Ryton®
- Gold plated contacts.
- Mounting holes for M2 screws.
- Dimensions compliant with **DIN 41635** standard – size "D".
- Terminals: solder terminals.
- Pin actuator, integral actuator (factory assembled) or auxiliary actuator (accessory

Approvals and Compliance to Standards

Z3ANS Microswitches are designed to replace **Z5661-1** and **Z5667** Microswitches approved by French Air Ministry as per letters 39.974/STAE/EQ2 dated July 24, 1975 and 42.893/STAE/EQ2 dated December 28, 1970 (AIR equipment sheets No 6.551.225 and 6.551.220).
Main compliance or performance equivalences with **MIL-PRF-8805** standard requirements.

Environmental characteristics

(For other test results, please contact us)

Salt spray resistance	96 h
Humidity	93% relative humidity, +40°C duration 168h (7 days)
Mechanical shocks resistance	40 g - duration 11 ms (pulse shape = saw tooth) 18 shocks (3/direction, both of 3 orthogonal axis)
Sinusoidal vibrations resistance	5 _ 2000 Hz, 50 g in each of 3 orthogonal axis
Random vibrations	10 _ 2000 Hz, 0.30 g^2 / Hz in each of 3 orthogonal axis

Mechanical characteristics

Characteristics according to the actuating point (arrow) indicated on dimension drawings.

Microswitches		**Without accessory**	**With flexible levers** (accessories)			
Types		**Z3ANS**	**Z3ANS + L11Z** **Z3ANS + L11GZ**		**Z3ANS + L13Z** **Z3ANS + L13GZ**	
Actuating lever pivot point			**I**	**II**	**I**	**II**
Max. operating force	**N**	2.50	2.00	2.50	2.50	3.60
Min. release force	**N**	0.70	0.60	0.80	0.70	1.0
Pretravel	**mm**	0.17 ... 0.42	–	–	–	–
Max. differential movement	**mm**	0.06	–	–	–	–
Min. overtravel (1)	**mm**	0.10	–	–	–	–

(1) Do not exceed this value in use

Microswitches		**Microswitches with integral lever** (factory assembled)					
Types		**Z3ANS-L20** **Z3ANS-L20G** **Z3ANS-L20V**		**Z3ANS-L60** **Z3ANS-L60G**		**Z3ANS-L61** **Z3ANS-L61G**	
Actuating lever pivot point		**A**	**B**	**A**	**B**	**A**	**B**
Max. operating force	**N**	0.90	0.60	0.70	0.45	0.90	0.60
Min. release force	**N**	0.27	0.19	0.18	0.12	0.27	0.19
Pretravel	**mm**	1.35	1.85	2.20	2.90	1.35	1.85
Max. differential movement	**mm**	0.30	0.40	0.50	0.75	0.30	0.40
Min. overtravel (1)	**mm**	0.35	0.65	2.60	3.20	1.30	1.60

(1) Do not exceed this value in use

Actuating lever pivot point : **A** or **B**..
Due to factory mounting, actuating **lever pivot point** must be defined for Microswitches with integral levers.See Mechanical characteristics tables for required travel and/or force

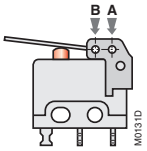

Electrical characteristics

Ratings (electrical load on one throw only)		**30 mV ... 5 V d.c.**	**30 V d.c.**	**115 V d.c. 400 Hz**	**220 V a.c. - 50 Hz**
Version 5 A – resistive load	**A**	10 mA	4 A	1 A	1 A
– inductive load	**A**	0.025 (L/R ≤ 5 ms)	0.5 (L/R φ ≥ 5ms)	–	0.5 (Cos φ ≥ 0.5)
Electrical service life	**cycles**	100 000	100 000	100 000	100 000
Changeover time	**ms**	≤ 10	≤ 10	≤ 10	≤ 10
Contact resistance	**mΩ**	≤ 25 mΩ under 6 V d.c. - 100 mA according to MIL-PRF-8805 (As new, wires or cable not included)			
Dielectric strength (50 Hz - 1 mn)					
– between terminals	**V a.c.**	500			
– between all terminals and earth (ground)	**V a.c.**	1500			
Insulation resistance	**MΩ**	≥ 100 MΩ under 500 V d.c. (at 23 °C with < 80 % relative humidity)			

Ordering details - Accessories

Accessories	**P/N**	**Weight (1 piece)** kg
Flexible levers		
Simple lever (for 1 microswitch)	**L11Z**	0.001
Tandem lever (for 2 microswitches)	**L13Z**	0.002
Flexible roller levers		
Simple lever (for 1 microswitch)	**L11GZ**	0.002
Tandem lever (for 2 microswitches)	**L13GZ**	0.003
Insulating plate-		
The use of an insulating plate is recommended if the microswitch is to be fitted against a metallic face.		
12.75 x 9 x 0.2	**IBCZ**	NS

Nota : Accessories in packs of 10. Screws are not included with the accessories.

Microswitch Z3INS type
+ lever L11GZ type
+ insulating plate IBCZ type

2 Microswitches Z3INS type
+ lever L13Z type
+ insulating plates IBCZ type

Lever mounting position

According to required performance, 2 mounting positions of the actuator lever are offered.

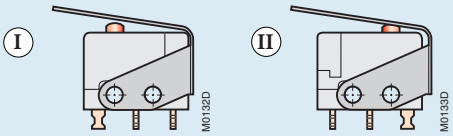

Ordering details

Lever length mm	**Actuating lever pivot point**	**P/N (1piece) kg**	**Weight**
Microswitch with pin actuator			
–	–	**Z3ANS**	0.001
Microswitch with integral lever actuator			
20	A	**Z3ANS-L20A**	0.002
	B	**Z3ANS-L20B**	0.002
Microswitch with integral roller lever actuator			
20	A	**Z3ANS-L20GA**	0.002
	B	**Z3ANS-L20GB**	0.002
Microswitch with added overtravel lever actuator			
30	A	**Z3ANS-L60A**	0.002
	B	**Z3ANS-L60B**	0.002
20	A	**Z3ANS-L61A**	0.002
	B	**3ANS-L61B**	0.002
Microswitch with added overtravel roller lever actuator			
30	A	**Z3ANS-L60GA**	0.003
	B	**Z3ANS-L60GB**	0.003
20	A	**Z3ANS-L61GA**	0.002
	B	**Z3ANS-L61GB**	0.002
Microswitch with adjustable lever actuator			
20	A	**Z3ANS-L20VA**	0.002
	B	**Z3ANS-L20VB**	0.002

Z3ANS

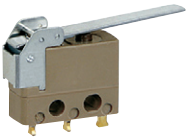

Z3ANS - L20A

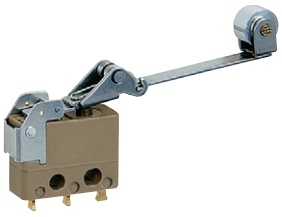

Z3ANS - L60GB

Circuit diagram

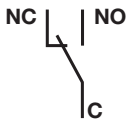

Connection

Solder terminals

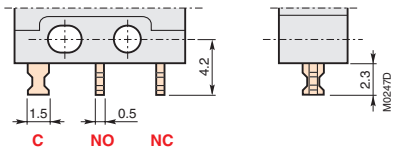

Dimensions

M2 screws recommended tightening torque: 0.18 to 0.2 Nm

Microswitches without accessory

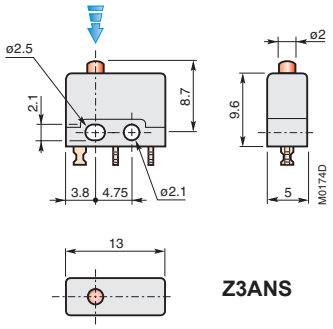

Z3ANS

Insulating plate
(Thickness 0.2 mm)

The use of an insulating plate is recommended if the Microswitch is to be fitted against a metallic face.

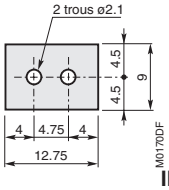

IBCZ

Microswitches with integral lever (factory assembled)

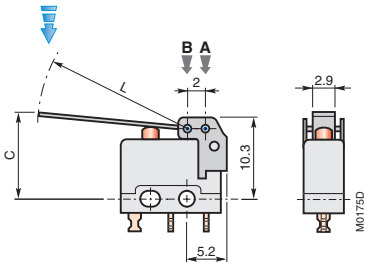

Z3ANS-L20...

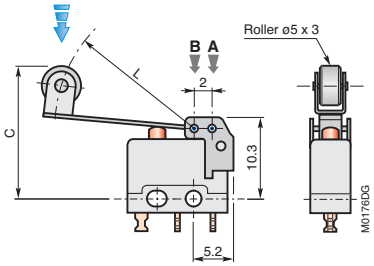

Z3ANS-L20G...

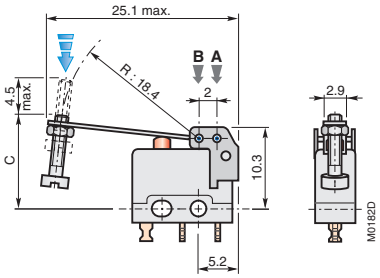

Z3ANS-L20G...

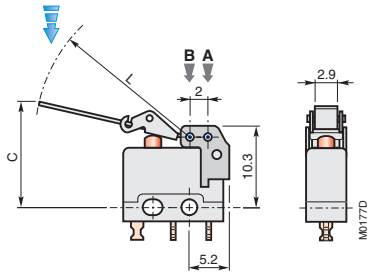

Z3ANS-L60...
Z3ANS-L61...

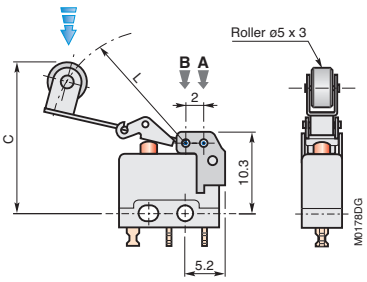

Z3ANS-L60G...
Z3ANS-L61G...

Levers	Dimensions mm - L	Actuating lever pivot point	Dimensions mm - C
L20	20	A B	10.6 10.9
L20G	18.5	A B	16.4 16.7
L61	20	A B	11.4 11.7
L60	30	A B	12.7 12.9
L61G	18.55	A B	17.2 17.4
L60G	28.65	A B	18.5 18.7
L20V	18.4	A B	12.5 13.0

Accessories

Flexible levers

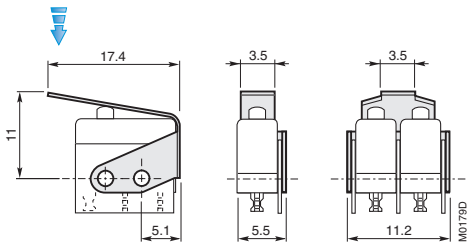

L11Z **L13Z**

Flexible roller levers

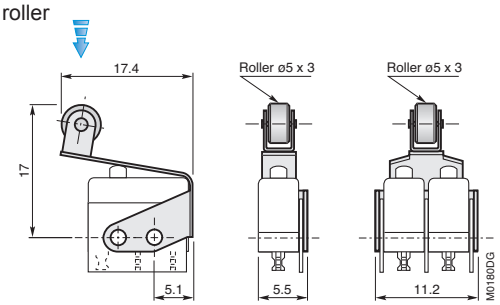

L11GZ **L13GZ**

Application

Microswitch for aerospace or industrial use where an hermetically sealed Microswitch is not required.

- Operating temperature: -55 °C ... +85 °C for **H5459** and **H5463** types
  -55 °C ... +150 °C for **H5461** and **H5467** types
- 2 available contact configurations: up to 200 mA for low level applications or 4 A.
- Mechanical service life: 1 000 000 cycles.

Description

Snap action switch - unsealed.

- Plastic casing.
- Gold plated silver contacts or gold contacts.
- Mounting holes for M2 screws.
- Dimensions compliant with DIN 41635 standard – size "B".
- Pin actuator or auxiliary actuator.
- Terminals : 4 options available
  – solder terminals..... code : **"S"**
  – "Radio" terminals..... code : **"R"**
  – fork terminals..... code : **"F"**
  – PCB terminals ..... code : **"J"**

Approvals and Compliance to Standards

French Air Ministry Approval based on standard : **AIR 8459** according to below.

AIR reference: 300-1A..... for microswitches H5463S, 350-1..... for microswitches H5467F,
300-2 ..... for microswitches H5469F, 350-2..... for microswitches H5461F.

AIR equipment sheets No 6.552.200, 6.552.201, 6.552.202, 6.552.203, 6.552.210.

Environmental characteristics

(For other test results, please contact us **)**

Salt spray resistance	48 heures
Humidity	93 % relative humidity, +40 °C duration 168 hours (7 days)
Sinusoidal vibrations	5 _ 500 Hz, 10 g in each of 3 orthogonal axis

Mechanical characteristics

Characteristics according to the actuating point (arrow) indicated on dimension drawings.

Microswitches		**Without accessory**	**With flexible levers** (accessories)		
Type		**H5459.../ H5461...** **H5463.../ H5467...**	**H54... + L11H** **H54... + L11GH**	**H54... + L13H** **H54... + L13GH**	**H54... + L14H** **H54... + L14GH**
Max. operating force	**N**	2.50	3.50	6.40	1.80
Min. release force	**N**	–	1.00	2.50	0.60
Pretravel	**mm**	0.15 ... 0.55	–	–	–
Differential movement	**mm**	0.04 ... 0.10	–	–	–
Min. overtravel (1)	**mm**	0.15	–	–	–

(1) Do not exceed this value in use.

Microswitches		**Articulated lever auxiliary actuator**		
Types		**H54... + L20H lever** **H54... + L20GH lever**		
Actuating lever pivot point		**I**	**II**	**III**
Max. operating force	**N**	0.70	1.70	0.40
Min. release force	**N**	–	–	–
Pretravel	**mm**	0.40 ... 2.0	0.30 ... 1.3	0.80 ... 4.0
Differential movement	**mm**	0.10 ... 0.40	0.10 ...0.30	0.30 ... 0.80
Min. overtravel (1)	**mm**	0.60	0.40	1.20

(1) Do not exceed this value in use.

Lever mounting position

According to required performance, 3 mounting positions of the actuator lever are offered.

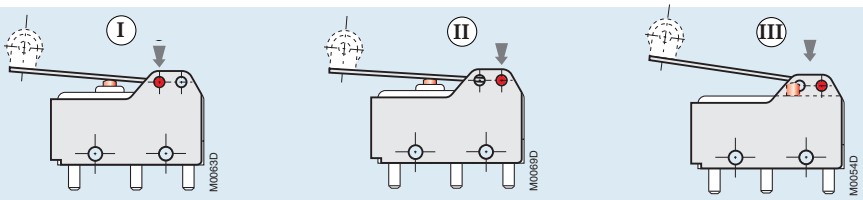

Electrical characteristics

Ratings (electrical load on one throw only)			**5 mV ... 30 V d.c.**	**30 V d.c.**	**220 V a.c. - 50 Hz**
Version 0.2A	– resistive load	**A**	0.2	–	0.2
	– inductive load	**A**	0.1 A (L/R ≤ 5 ms)	–	0.1 (Cos φ ≥ 0.5)
Version 4 A	– resistive load	**A**	–	4	4
	– inductive load	**A**	–	2 (L/R ≤ 5 ms)	2 (Cos φ ≥ 0.5)
Electrical service life		**cycles**	100 000	100 000	100 000
Changeover time		**ms**	≤ 10	≤ 10	≤ 10
Contact resistance		**mΩ**	≤ 50 mΩ under 6 V d.c. – 100 mA according to MIL-PRF-8805 (As new, wires or cable not included)		
Dielectric strength (50 Hz - 1 mn)					
– between terminals		**V a.c.**	500		
– between all terminals and earth (ground)		**V a.c.**	1500		
Insulation resistance		**MΩ**	≥ 100 MΩ under 500 V d.c. (at 23 °C with < 80 % relative humidity)		

Ordering details

Rated breaking capacity (220 V - 50 Hz) **A**	**Terminals**	**P/N**	**Weight (1 piece) kg**
Microswitch with pin actuator - Operating temperature +85 °C			
0.2 Low currents	Solder terminals	**H5459S**	0.003
	Fork terminals	**H5459F**	0.003
	"Radio" terminals	**H5459R**	0.003
	PCB terminals	**H5459J**	0.003
4 Higher currents	Solder terminals	**H5463S**	0.003
	Fork terminals	**H5463F**	0.003
	"Radio" terminals	**H5463R**	0.003
	PCB terminals	**H5463J**	0.003
Microswitch with pin actuator - Operating temperature +150 °C			
0.2 Low currents	Solder terminals	**H5461S**	0.003
	Fork terminals	**H5461F**	0.003
	"Radio" terminals	**H5461R**	0.003
4 Higher currents	Solder terminals	**H5467S**	0.003
	Fork terminals	**H5467F**	0.003
	"Radio" terminals	**H5467R**	0.003

H5459J + L20GH

H5463R

H5467S

Ordering details - Accessories

	Lever length mm	**P/N**	**Weight (1 piece) kg**
Flexible lever			
Simple lever	24	**L11H**	0.001
Tandem lever	25.5	**L13H**	0.002
Simple lever	34	**L14H**	0.001
Flexible roller levers			
Simple lever	23	**L11GH**	0.002
Tandem lever	24.5	**L13GH**	0.003
Simple lever	33	**L14GH**	0.002
Articulated lever auxiliary actuatore			
Simple lever		**L20H**	0.002
Roller lever actuator		**L20GH**	0.003
Insulating plates - The use of an insulating plate is recommended if the microswitch is to be fitted against a metallic face.			
19 x 10 x 0.4		**IACH**	NS
19 x 10 x 0.5		**IBCH**	NS
20 x 18 x 0.4		**IALH**	NS

Note : Accessories in packs of 10.

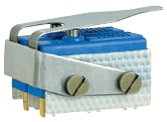

2 Microswitches H5467F type
+ lever L13H type
+ insulating plates IBCH type

H5467R + L14GH

H5461R + L20H

PETERCEM

Circuit diagram

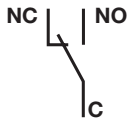

Connection

- Solder terminals **"S"**

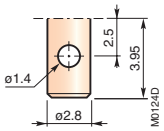

- "Radio" terminal **"R"**

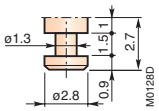

- Fork terminals **"F"**

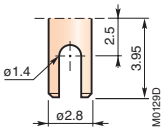

- PCB terminals **"J"**

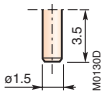

Dimensions

PCB terminal devices are shown on below drawings. M2 screws recommended tightening torque: 0.25 to 0.30 Nm

Microswitches without accessory

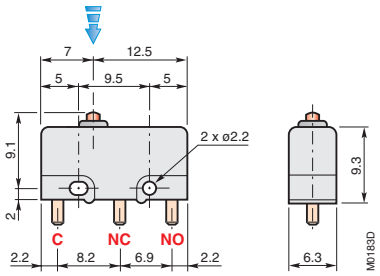

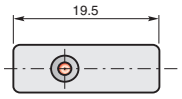

H54...

Insulating plates

The use of an insulating plate is recommended if the Microswitch is to be fitted against a metallic face;

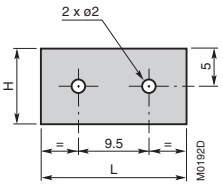

Types	L mm	H mm	Th. mm
IACH	19	10	0.4
IBCH	19	10	0.5
IALH	20	18	0.4

Printed Circuit Board drilling plan for "J" terminals

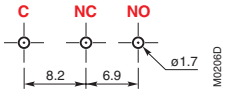

Flexible levers

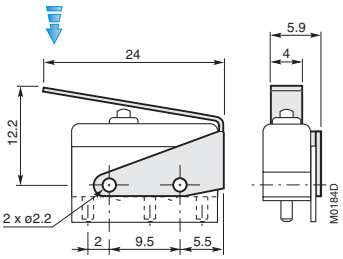

L11H

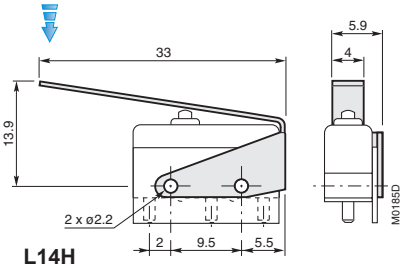

L14H

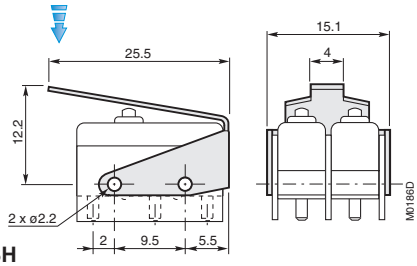

L13H

Flexible roller lever

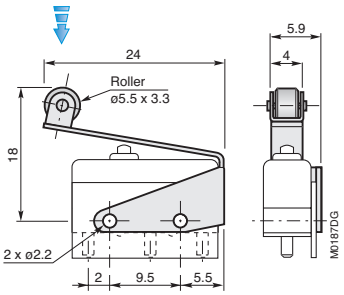

L11GH

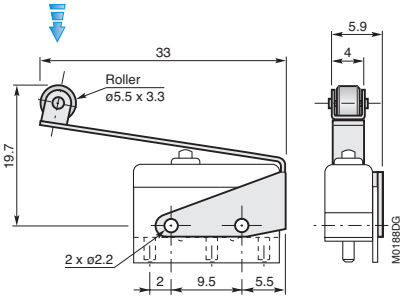

L14GH

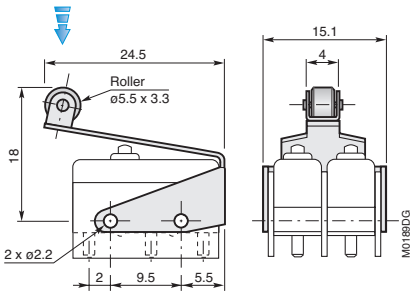

L13GH

Articulated lever auxiliary actuator

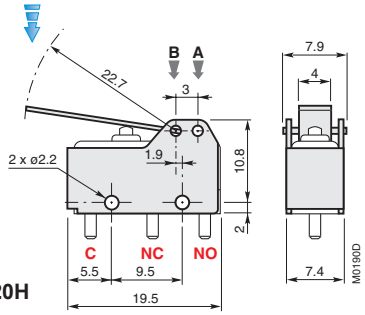

L20H

Articulated roller lever auxiliary actuator

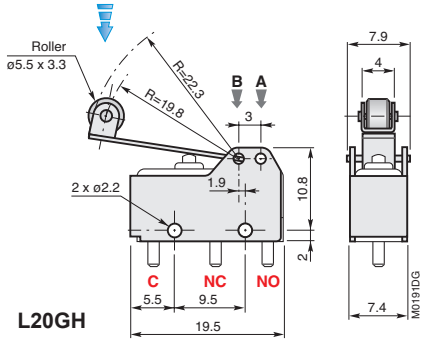

L20GH

Application

Microswitch for industrial applications.

- Operating temperature: -40 °C ... +85 °C
- Rated breaking capacity: From few mA up to 5 A.
- 2 available mechanisms allowing 2 operating forces:
  - standard operating force: 1.5 N,
  - low operating force: 0.6 N.
- Mechanical service life : 10 000 000 cycles.

Description

Snap action switch - unsealed.

- Polyamide 6 casing.
- Gold plated silver contacts.
- Mounting holes for M2 screws.
- **HP** type Microswitches dimensions compliant with DIN 41635 standard – size "B".
- Pin actuator or auxiliary actuator (accessory) for **HP** types ; integral actuator (factory assembled) for **HL** types.
- Terminals: 3 options available
  - solder terminals..... code : "**S**"
  - quick connect terminals, 2.8 mm..... code : "**E**"
  - PCB terminals ..... code : "**J**"

Environmental characteristics

(For other test results, please contact us)

Salt spray resistance	24 hours
Humidity	93 % relative humidity, +40 °C duration 240 hours (10 days)
Sinusoidal vibrations	5 _ 500 Hz, 10 g in each of 3 orthogonal axis

Mechanical characteristics of HP microswitches

Characteristics according to the actuating point (arrow) indicated on dimension drawings.

HP type Microswitch with pin actuator - Without accessory

		HP...12	HP...32
Max. operating force	**N**	1.50	0.60
Min. release force	**N**	0.35	0.12
Operating point (1)	**mm**	8.4 ± 0.3	8.4 ± 0.3
Max. differential movement	**mm**	0.15	0.15
Min. overtravel (2)	**mm**	0.15	0.15

HP type Microswitch with flexible lever auxiliary actuator

Standard mechanism		HPS12 HPE12 HPJ12 + lever L110		HPS12 HPE12 HPJ12 + lever L140		HPS12 HLE12 HPJ12 + lever L13H	
Actuating lever pivot point		I	II	I	II	I	II
Max. operating force	**N**	2.45	2.10	1.75	1.50	3.50	2.50
Min. release force	**N**	0.45	0.40	0.30	0.25	1.20	1.0
Max. pretravel	**mm**	6.50	6.50	13.0	13.0	5.50	5.50
Max. differential movement	**mm**	0.60	1.20	1.20	2.40	0.60	1.20
Min. overtravel (2)	**mm**	0.40	0.50	0.60	0.70	0.40	0.50

HP type Microswitch with flexible roller lever auxiliary actuator or with flexible simulated roller lever auxiliary actuator

Standard mechanism		HPS12 HPE12 HPJ12 + lever LG110 or + lever LC110		HPS12 HPE12 HPJ12 + lever LG140 or + lever LC140		HPS12 HPE12 HPJ12 + lever L13GH	
Actuating lever pivot point		I	II	I	II	I	II
Max. operating force	**N**	2.90	2.50	1.95	1.70	4.00	3.00
Min. release force	**N**	0.55	0.45	0.40	0.30	1.30	1.10
Max. pretravel	**mm**	5.50	5.50	11.0	11.0	5.50	5.50
Max. differential movement	**mm**	0.50	1.00	1.00	1.00	0.50	1.00
Min. overtravel (2)	**mm**	0.30	0.40	0.50	0.60	0.30	0.40

Mechanical characteristics of HP microswitches (continued)

HP type Microswitch with flexible lever auxiliary actuator

Low operating force mechanism		HPS32 HPE32 HPJ32 + lever L110		HPS32 HPE32 HPJ32 + lever L140		HPS32 HPE32 HPJ32 + lever L13H	
Actuating lever pivot point		**I**	**II**	**I**	**II**	**I**	**II**
Max. operating force	**N**	1.95	1.80	1.40	1.30	2.80	2.30
Min. release force	**N**	0.35	0.30	0.20	0.20	1.10	0.90
Max. pretravel	**mm**	6.50	6.50	13.0	3.0	5.50	5.50
Max. differential movement	**mm**	0.50	1.00	0.90	1.80	0.50	1.20
Min. overtravel (2)	**mm**	0.40	0.50	0.60	0.70	0.40	0.40

HP type Microswitch with flexible roller lever auxiliary actuator or with flexible simulated roller lever auxiliary actuator

Low operating force mechanism		HPS32 HPE32 HPJ32 + lever LG110 or + lever LC110		HPS32 HPE32 HPJ32 + lever LG140 or + lever LC140		HPS32 HPE32 HPJ32 + lever L13GH	
Actuating lever pivot point		**I**	**II**	**I**	**II**	**I**	**II**
Max. operating force	**N**	2.30	2.15	1.55	1.45	3.30	2.70
Min. release force	**N**	0.40	0.35	0.30	0.25	1.20	1.00
Max. pretravel	**mm**	5.50	5.50	11.0	11.0	5.50	5.50
Max. differential movement	**mm**	0.40	0.80	0.70	1.00	0.40	1.00
Min. overtravel (2)	**mm**	0.30	0.40	0.50	0.60	0.30	0.40

(1) Dimension regarding mounting holes axis.

(2) Do not exceed this value in use.

The force at full overtravel should not be greater than twice the maximum operating force.

Lever mounting position

According to required performance, 2 mounting positions of the actuator lever

I

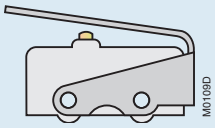

II

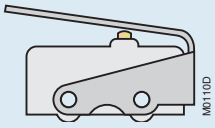

Mechanical characteristics of HL microswitches

Characteristics according to the actuating point (arrow) indicated on dimension drawings.

Microswitch with straight lever actuator

Standard mechanism		HL...12-L22		HL...12-L24		HL...12-L27	
Actuating lever pivot point		**C**	**B**	**C**	**B**	**C**	**B**
Max. operating force	**N**	0.23	0.37	0.21	0.34	0.19	0.31
Min. release force	**N**	0.03	0.06	0.03	0.06	0.02	0.05
Operating point (1)	**mm**	11.9 ± 4.0	10.6 ± 2.2	12.2 ± 4.4	10.7 ± 2.4	12.6 ± 5.0	10.9 ± 2.7
Max. differential movement	**mm**	1.60	0.85	1.75	0.90	1.95	1.00
Min. overtravel (2)	**mm**	0.90	0.55	1.0	0.60	1.15	0.70

Microswitch with roller lever actuator

Standard mechanism		HL...12-LG22		HL...12-LG24		HL...12-LG27	
Actuating lever pivot point		**C**	**B**	**C**	**B**	**C**	**B**
Max. operating force	**N**	0.26	0.44	0.25	0.40	0.22	0.35
Min. release force	**N**	0.03	0.07	0.03	0.06	0.02	0.05
Operating point (1)	**mm**	17.7 ± 3.5	16.6 ± 2.1	18.0 ± 3.9	16.7 ± 2.3	18.4 ± 4.4	16.9 ± 2.6
Max. differential movement	**mm**	1.40	0.75	1.55	0.80	1.75	0.90
Min. overtravel (2)	**mm**	0.80	0.45	0.85	0.50	1.00	0.60

Microswitch with simulated roller lever actuator

Standard mechanism		HL...12-LC22		HL...12-LC24		HL...12-LC27	
Actuating lever pivot point		**C**	**B**	**C**	**B**	**C**	**B**
Max. operating force	**N**	0.31	0.49	0.28	0.44	0.24	0.38
Min. release force	**N**	0.04	0.08	0.03	0.07	0.03	0.06
Operating point (1)	**mm**	14.3 ± 3.3	13.3 ± 1.9	14.6 ± 3.7	13.4 ± 2.1	15.0 ± 4.2	13.6 ± 2.4
Max. differential movement	**mm**	1.25	0.65	1.40	0.75	1.60	0.85
Min. overtravel (2)	**mm**	0.70	0.40	0.80	0.45	0.90	0.55

Mechanical characteristics of HL microswitches (continued)

Microswitch with straight lever actuator

Low operating force mechanism		HL...32-L22		HL...32-L24		HL...32-L27	
Actuating lever pivot point		C	B	C	B	C	B
Max. operating force	N	0.10	0.15	0.09	0.14	0.08	0.13
Min. release force	N	0.01	0.02	0.01	0.02	0.01	0.01
Operating point (1)	mm	11.9 ± 4.0	10.6 ± 2.2	12.2 ± 4.4	10.7 ± 2.4	12.6 ± 5.0	10.9 ± 2.7
Max. differential movement	mm	1.60	0.85	1.75	0.90	1.95	1.00
Min. overtravel (2)	mm	0.90	0.55	1.00	0.60	1.15	0.70

Microswitch with roller lever actuator

Low operating force mechanism		HL...32-LG22		HL...32-LG24		HL...32-LG27	
Actuating lever pivot point		C	B	C	B	C	B
Max. operating force	N	0.11	0.18	0.10	0.16	0.09	0.14
Min. release force	N	0.01	0.02	0.01	0.02	0.01	0.02
Operating point (1)	mm	17.7 ± 3.5	16.6 ± 2.1	18.0 ± 3.9	16.7 ± 2.3	18.4 ± 4.4	16.9 ± 2.6
Max. differential movement	mm	1.40	0.75	1.55	0.80	1.75	0.90
Min. overtravel (2)	mm	0.80	0.45	0.85	0.50	1.00	0.60

Microswitch with simulated roller lever actuator

Low operating force mechanism		HL...32-LC22		HL...32-LC24		HL...32-LC27	
Actuating lever pivot point		C	B	C	B	C	B
Max. operating force	N	0.12	0.20	0.11	0.18	0.10	0.15
Min. release force	N	0.01	0.02	0.01	0.02	0.01	0.02
Operating point (1)	mm	14.3 ± 3.3	13.3 ± 1.9	14.6 ± 3.7	13.4 ± 2.1	15.0 ± 4.2	13.6 ± 2.4
Max. differential movement	mm	1.25	0.65	1.40	0.75	1.60	0.85
Min. overtravel (2)	mm	0.70	0.40	0.80	0.45	0.90	0.55

(1) Dimension regarding mounting holes axis. (2) Do not exceed this value in use.

The force at full overtravel should not be greater than twice the maximum operating force.

Attention :

Due to factory mounting, **HL** type product codes must be followed by an actuating lever type and it's pivot point.

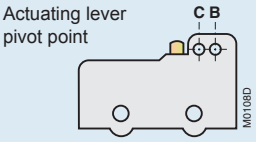

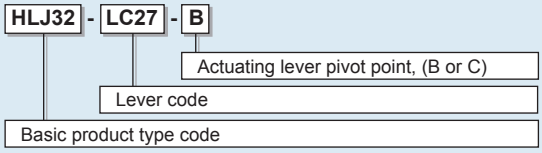

Electrical characteristics

Ratings (electrical load on one throw only)			30 V d.c. (see Note)	125 V a.c. - 50 Hz	220 V a.c. - 50 Hz
Mechanism	– resistive load	A	50 mA ... 2 A	5 A	2 A
1.5 N	– inductive load	A	25 mA ... 1 A (L/R ≤ 5 ms)	2.5 A (cos φ ≥ 0.5)	1 A (cos φ ≥ 0.5)
Mechanism	– resistive load	A	50 mA ... 1.5 A	3 A	1.5 A
0.6 N	– inductive load	A	25 mA ... 0.75 A (L/R ≤ 5 ms)	1.5 A (cos φ ≥ 0.5)	1 A (cos φ ≥ 0.5)
Electrical service life		cycles	100 000		
Dielectric strength (50 Hz - 1 mn)					
– between terminals		V a.c.	500		
– between all terminals and earth (ground)		V a.c.	1500		
Insulation resistance		MΩ	≥ 100 MΩ under 500 V d.c. (at 23 °C with < 80 % relative humidity		

Note: Ratings = 50 mA resistive load and 25 mA inductive load (30V d.c.) for PCB terminal Microswitches ("J" termination)

Coding (example)

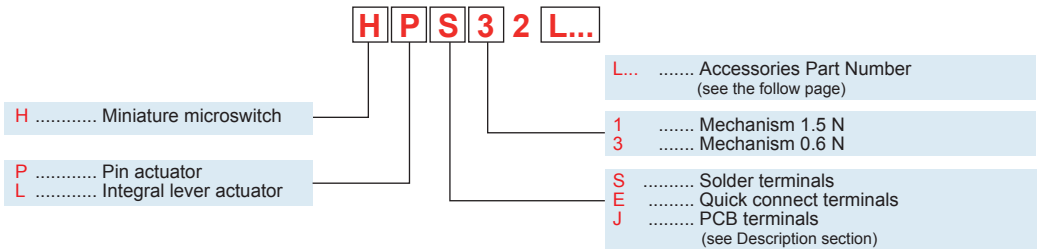

Ordering details

Operating force N	Terminals	P/N	Weight (1 piece) Kg
Microswitch with pin actuator			
1.5 Standard	Solder terminals	**HPS12**	0.002
	Quick connect terminals	**HPE12**	0.002
	PCB terminals	**HPJ12**	0.002
0.6 low force	Solder terminals	**HPS32**	0.002
	Quick connect terminals	**HPE32**	0.002
	PCB terminals.	**HPJ32**	0.002
Microswitch with integral lever actuator			
1.5 Standard	Solder terminals	**HLS12-L...**	0.002
	Quick connect terminals	**HLE12-L...**	0.002
	PCB terminals.	**HLJ12-L...**	0.002
0.6 low force	Solder terminals	**HLS32-L...**	0.002
	Quick connect terminals	**HLE32-L...**	0.002
	PCB terminals	**HLJ32-L...**	0.002

HPE12

HPS Microswitch + LC110 lever + insulating plate IBCH

HLS12-L27-C

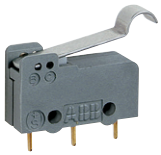

HLJ32-LC24-B

Ordering details - Accessories

	Lever length L = 22.5 mm	L = 24.5 mm	L = 27.5 mm	P/N	Weight (1 piece) kg
Simple lever	**L22**	**L24**	**L27**	Due to numerous possibilities, available products code are not listed in this table	0.001
Roller lever actuator	**LG22**	**LG24**	**LG27**		0.002
Simulated roller lever	**LC22**	**LC24**	**LC27**		0.001

Accessories for HP type Microswitch

	Lever length mm	P/N	Weight (1 piece) kg
Flexible levers			
Simple lever	25	**L110**	0.001
Tandem lever	24	**L13H**	0.002
Simple lever	35	**L140**	0.001
Flexible roller levers			
Simple lever	24	**LG110**	0.002
Tandem lever	23	**L13GH**	0.003
Simple lever	34	**LG140**	0.002
Flexible simulated roller lever auxiliary actuator"			
Simple lever	23	**LC110**	0.001
Simple lever	33	**LC140**	0.001

L110, L140

L13H

LG110, LG140

L13GH

LC110, LC140

Insulating plates - The use of an insulating plate is recommended if the microswitch is to be fitted against a metallic face.

19 x 10 x 0.4	**IACH**	NS
19 x 10 x 0.5	**IBCH**	NS
20 x 18 x 0.4	**IALH**	NS

Note : Accessories in packs of 10. Screws are not included with the accessories.

Circuit diagram

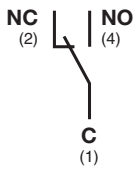

Connection

- **Solder terminals "S"**

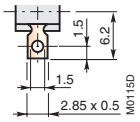

- **Quick connect 2.8 mm "E"**

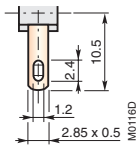

- **PCB terminal "J"**

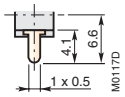

Dimensions

"J" PCB terminal devices are shown on below drawings.
M2 screws recommended tightening torque: 0.25 to 0.30 Nm

Printed Circuit Board drilling plan for HPJ... et HLJ... terminals

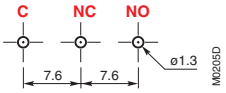

HP type Microswitch

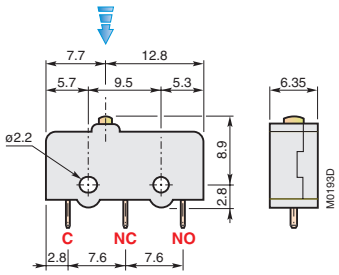

Insulating plates

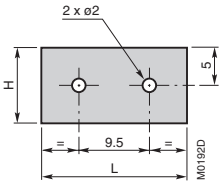

Types	L mm	H mm	th. mm
IACH	19	10	0.4
IBCH	19	10	0.5
IACL	20	18	0.4

Flexible levers

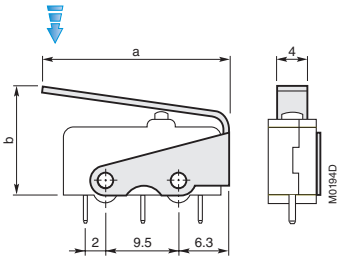

Types	Dimension: mm	
	a	b
L110	25	13.5
L140	35	16.2

Flexible roller levers

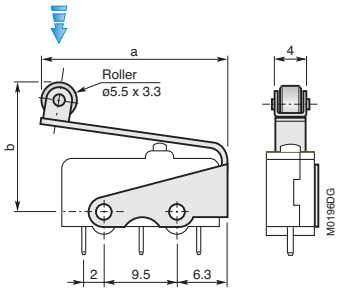

Types	Dimension: mm	
	a	b
LG110	24	19
LG140	34	21.7

Flexible simulated roller levers

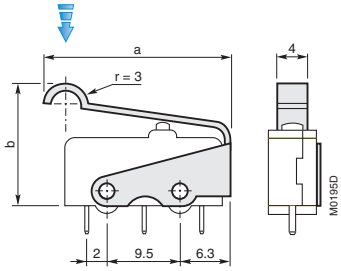

Types	Dimension: mm	
	a	b
LC110	23	14.5
LC140	33	17.2

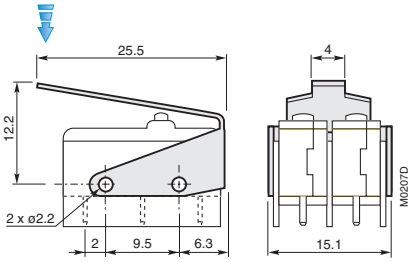

L13H

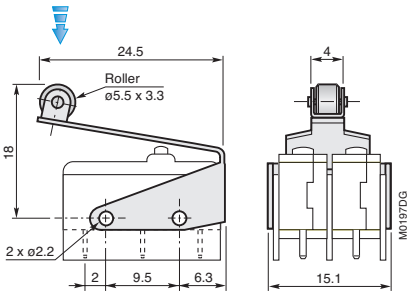

L13GH

Dimensions

HL type Microswitch (Lever not shown)

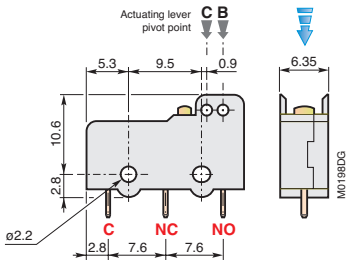

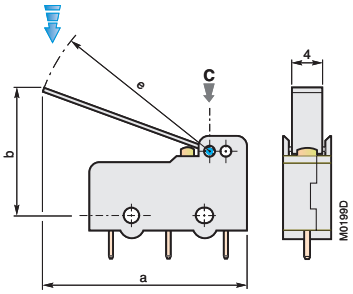

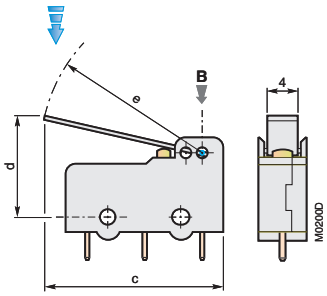

HL...-L...

Simple lever

Types	Dimension: mm				
	a	b	c	d	e
L22	27.2	17.2	25.2	13.5	22.4
L24	29.2	17.9	27.2	13.9	24.4
L27	32.2	19	30.2	14.5	27.4
position	C		B		

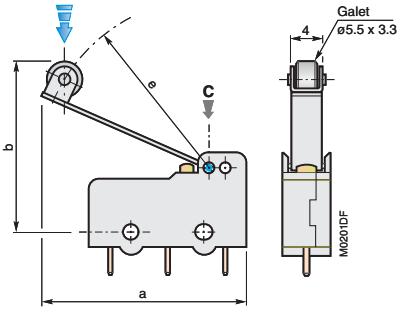

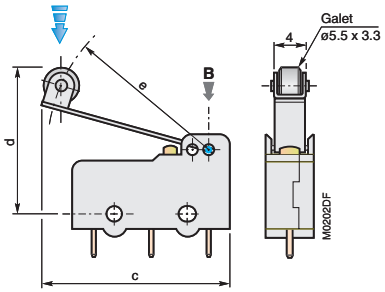

HL...-LG...

Roller lever actuator

Types	Dimension: mm				
	a	b	c	d	e
LG22	26.75	22.5	24.75	19.1	19.2
LG24	28.75	23.2	26.75	19.5	21.2
LG27	31.72	24.3	29.75	20.1	24.2
position	C		B		

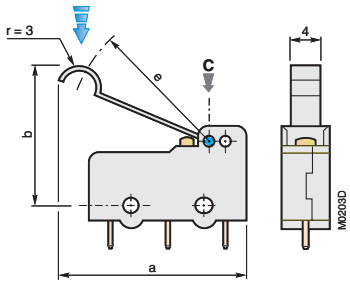

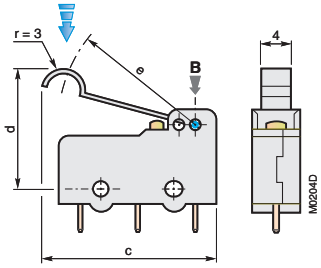

HL...-LC...

Simulated roller lever

Types	Dimension: mm				
	a	b	c	d	e
LC22	25	18.6	23	15.7	17.2
LC24	27	19.3	25	16.1	19.2
LC27	30	20.4	28	16.7	22.2
position	C		B		

PETERCEM

Application

Microswitch for industrial applications.

- Operating temperature: -25 °C ... +85 °C.
- 2 available pin actuator positions allowing 2 travel/force ranges.
- Several contact gaps available depending on terminals arrangement.
- Mechanical service life: 5 000 000 cycles

Description

Snap action switch - unsealed.

- Plastic casing.
- Silver contacts.
- Mounting holes for M4 screws.
- Dimensions compliant with **DIN 41635** standard – size "E".
- Several operating actuators available : pin actuator, flexible lever, telescopic plunger...
- Terminals:
  – triangular arrangement solder terminals .....standard,
  – in line screw terminals.....code : "N"

Electrical characteristics

d.c. circuit

Ratings (electrical load on one throw only)			**48 V d.c.**	**115 V d.c.**	**250 V d.c.**
Solder terminals	– resistive load	**A**	8	–	–
	– inductive load	**A**	4 (L/R ≤ 5 ms)	0.5 (L/R ≤ 5 ms)	0.25 (L/R ≤ 5 ms)
Screw terminals	– resistive load	**A**	8	–	–
	– inductive load	**A**	4 (L/R ≤ 5 ms)	0.5 (L/R ≤ 5 ms)	0.25 (L/R ≤ 5 ms)
Electrical service life		**cycles**	1 000 000 cycles with resistive load		
		cycles	500 000 cycles with inductive load		
Dielectric strength (50 Hz - 1 mn)					
– between terminals; according to contacts gap		**V a.c.**	500 ... 1000		
– between all terminals and earth (ground)		**V a.c.**	2000 for solder terminal devices (triangular arrangement) - Standard configuration		
		V a.c.	2500 for screw terminal devices (in line) - Product types including "**N**"		
Insulation resistance		**MΩ**	≥ 100 MΩ under 500 V d.c. (at 23 °C with < 80 % relative humidity)		

a.c. circuit

Ratings (electrical load on one throw only)			**125 V a.c. - 50 Hz**	**250 V a.c. - 50 Hz**	**380 V a.c. - 50 Hz**	**460 V a.c. - 50 Hz**
Solder terminals	– resistive load	**A**	10	7	–	–
	– inductive load	**A**	8 (cos φ ≥ 0.3)	5 (cos φ ≥ 0.3)	–	–
Screw terminals	– resistive load	**A**	10	10	5	3
	– inductive load	**A**	5 (cos φ ≥ 0.3)	5 (cos φ ≥ 0.3)	2.5 (cos φ ≥ 0.3)	–
Electrical service life		**cycles**	500 000			
Dielectric strength (50 Hz - 1 mn)						
– between terminals; according to contacts gap		**V a.c.**	500 ... 1000			
– between all terminals and earth (ground)		**V a.c.**	2000 for solder terminal devices (triangular arrangement) - Standard configuration			
		V a.c.	2500 for screw terminal devices (in line) - Product types including "**N**"			
Insulation resistance		**MΩ**	≥ 100 MΩ under 500 V d.c. (at 23 °C with < 80 % relative humidity)			

PETERCEM

Mechcanical characteristics

Characteristics according to the actuating point (arrow) indicated on dimension drawings.

Microswitch with pin actuator

Microswitches		X1A1	T1A1	R1A1	X4A1	X4NA1	R4A1	R4NA1
Max. operating force	N	1.10	0.50	3.50	1.20	1.20	3.70	3.70
Min. release force	N	–	–	–	–	–	–	–
Max. pretravel	mm	1.30	1.30	0.60	1.30	1.30	0.60	0.60
Max. differential movement	mm	0.10	0.10	0.07	0.33	0.33	0.17	0.17
Min. overtravel (1)	mm	0.50	0.50	0.20	0.50	0.50	0.20	0.20
Pin actuator position: "A" dimension	mm	20.6	20.6	13.9	20.6	20.6	13.9	13.9

Microswitch with telescopic plunger actuator

Microswitches		R1P10	R1P20	R4P30	R4NP30	R4P30G	R4NP30G
Max. operating force	N	3.50	3.50	4.00	4.00	4.00	4.00
Min. release force	N	–	–	–	–	–	–
Max. pretravel	mm	0.60	0.60	0.60	0.60	0.60	0.60
Max. differential movement	mm	0.07	0.07	0.17	0.17	0.17	0.17
Min. overtravel (1)	mm	0.60	0.60	4.00	4.00	4.50	4.50
Pin actuator position: "A" dimension	mm	13.9	13.9	13.9	13.9	13.9	13.9

Microswitch with lever actuator

Microswitches		R1L10	R1L10G	with wire rod actuator X1L41
Max. operating force	N	3.00	3.00	0.07
Min. release force	N	–	–	–
Max. pretravel	mm	6.50	6.50	25.0
Max. differential movement	mm	0.70	0.70	3.50
Min. overtravel (1)	mm	0.60	0.60	5.00
Pin actuator position: "A" dimension	mm	13.9	13.9	20.6

Microswitch with integral lever actuator

Microswitches		X1L20	X4NL20	X1L21	X1L24	X1L20G	X4NL20G	X1L21G
Max. operating force	N	0.18	0.20	0.21	0.08	0.18	0.20	0.21
Min. release force	N	–	–	–	–	–	–	–
Max. pretravel	mm	10.0	10.0	6.50	25.0	10.0	10.0	6.50
Max. differential movement	mm	1.00	3.30	0.60	2.00	1.00	3.30	0.60
Min. overtravel (1)	mm	3.00	3.00	2.50	2.00	3.00	3.00	2.50
Pin actuator position: "A" dimension	mm	20.6	20.6	20.6	20.6	20.6	20.6	20.6

Microswitch with integral lever actuator - inverted-action

Microswitches		X4L31	X4L30G	X4L31G	X4L35G	X4L35V
Max. operating force	N	5.50	2.50	5.50	3.50	3.50
Min. release force	N	–	–	–	–	–
Max. pretravel	mm	3.50	6.50	3.50	4.00	4.00
Max. differential movement	mm	0.55	1.00	0.55	1.00	0.90
Min. overtravel (1)	mm	4.0	6.00	4.0	3.5	2.00
Pin actuator position: "A" dimension	mm	20.6	20.6	20.6	20.6	20.6

(1) Do not exceed this value in use

Pin actuator position

Dimension A: 13.9 mm or 20.6 mm

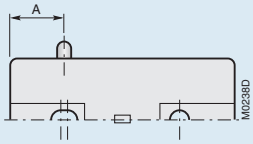

Coding (example)

X 4 N A1

Pin actuator 20.6 mm

X ..... Standard mechanism
T ..... "low force" mechanism

Pin actuator 13.9 mm

R ..... Standard mechanism

Contact gap

1 ..... 0.2 ... 0.4 mm
4 ..... 1.1 ... 1.2 mm

Actuator type

A1 ..... Pin actuator
L ..... Lever
P ..... Plunger actuator

Terminals

– ..... Solder terminals
N ..... Screw terminals

PETERCEM

Ordering details

Contact gap mm	Pin position mm	Mechanism	Terminals	P/N	Weight (1 piece) kg
Microswitch with pin actuator					
0.2 ... 0.4	20.6	standard	solder	**X1A1**	0.024
		low force	solder	**T1A1**	0.024
	13.9	standard	solder	**R1A1**	0.024
1.1 ... 1.2	20.6	standard	solder	**X4A1**	0.024
			screw	**X4NA1**	0.028
	13.9	standard	solder	**R4A1**	0.024
			screw	**R4NA1**	0.028
Microswitch with telescopic plunger actuator					
0.2 à 0.4	13.9	standard	solder	**R1P10**	0.030
				R1P20	0.028
Microswitch with telescopic plunger actuator; M12 threaded bushing					
1.1 à 1.2	13.9	standard	solder	**R4P30**	0.044
			screw	**R4NP30**	0.048
Microswitch with telescopic roller plunger actuator; M12 threaded bushing					
1.1 à 1.2	13.9	standard	solder	**R4P30G**	0.044
			screw	**R4NP30G**	0.048
Microswitch with flexible lever actuator					
0.2 ... 0.4	13.9	standard	solder	**R1L10**	0.026
Microswitch with flexible roller lever actuator					
0.2 ... 0.4	13.9	standard	solder	**R1L10G**	0.028
Microswitch with integral lever actuator					
0.2 ... 0.4	20.6	standard	solder	**X1L20**	0.028
				X1L21	0.028
				X1L24	0.030
1.1 ... 1.2	20.6	standard	screw	**X4NL20**	0.032
Microswitch with integral roller lever actuator					
0.2 ... 0.4	20.6	standard	solder	**X1L20G**	0.030
				X1L21G	0.030
1.1 ... 1.2	20.6	standard	screw	**X4NL20G**	0.034
Microswitch with integral lever actuator - inverted-action (1)					
1.1 ... 1.2	20.6	standard	solder	**X4L31**	0.028
Microswitch with integral adjustable lever actuator - inverted-action (1)					
1.1 ... 1.2	20.6	standard	solder	**X4L30G**	0.033
				X4L31G	0.030
				X4L35G	0.031
Microswitch with integral adjustable lever actuator - inverted-action (1)					
1.1 ... 1.2	20.6	standard	solder	**X4L35V**	0.032
Microswitch with wire rod actuator					
0.2 ... 0.4	20.6	standard	solder	**X1L41**	0.030


X4A1


R1P10


R4NNP30


R1L10G


X1L20G


X4L31G

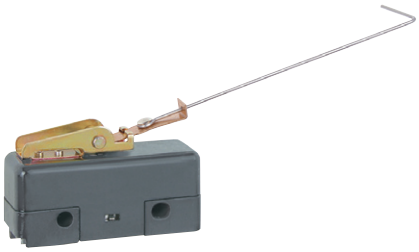
X1L41

Note: Only above listed product types are available.

(1) Microswitches with **L3...** types inverted-action actuators are actuated in rest position.

PETERCEM

Ordering details - Accessories

Specific Products	P/N	Masse packaging (2) kg
Terminals		
Screw terminals with Insulating plate	–	0.040
90° quick connect 6.35 x 0.8 mm terminals	–	0.025
180° quick connect 6.35 x 0.8 mm terminals	–	0.025
Other accessories		
Terminal enclosure	**K**	0.020
Sealing part for "P20" plunger actuator	**P21**	0.005

(2)Packaging:

– screw terminals and insulating plate	30 screws + 30 terminals + 10 insulating plates (to fit out 10 microswitches),
– quick connect 6.35 x 0.8 terminals	x 30 (to fit out 10 microswitches),
– terminal enclosure	x 1,
– sealing part for "**P20**" plunger actuator	x 10.

Note: Only above listed product types are available

Circuit diagram

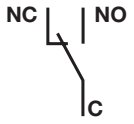

Connection

Triangular arrangement solder terminals - standard

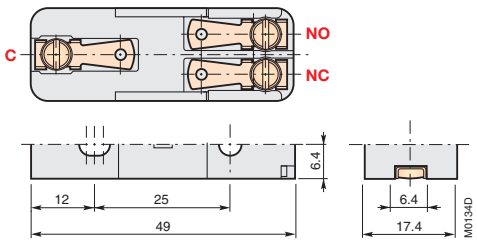

In line M3 screw with cup washer terminals
Recommended tightening torque: 0.6 to 1 Nm

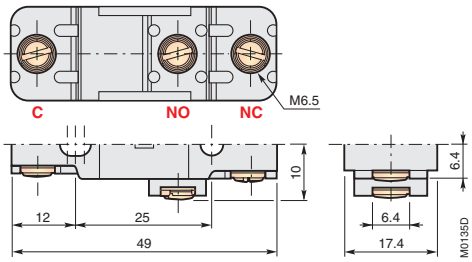

Dimensions

Mounting holes for M4 screws - Recommended tightening torque: 1.5 Nm

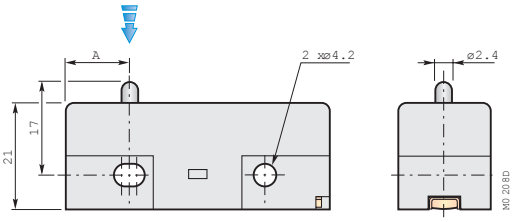

X1A1, T1A1, R1A1, X4A1,

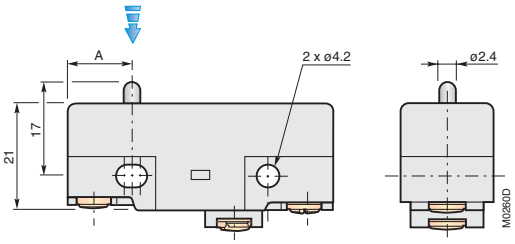

X4NA1, R4NA1

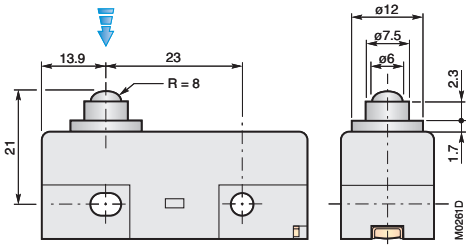

R1P10

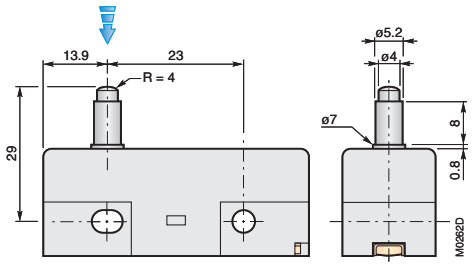

R1P20

Dimensions (continued)

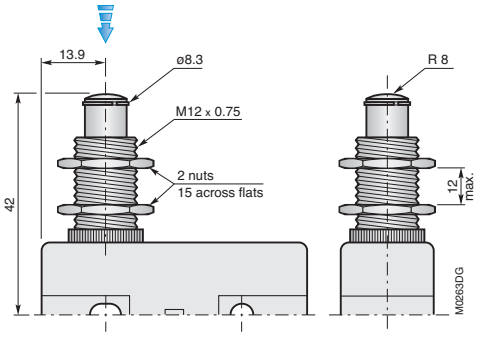

R4P30, R4NP30
Panel mounting by threaded bushing and nuts.
Panel hole (recommended) Ø 13 $^{+0.2/0}$
M12 nuts recommended tightening torque: 5 Nm.

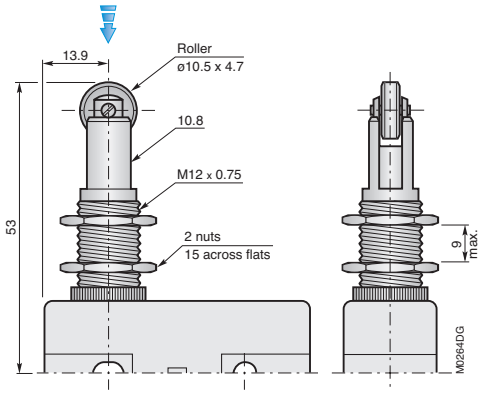

R4P30G, R4NP30G

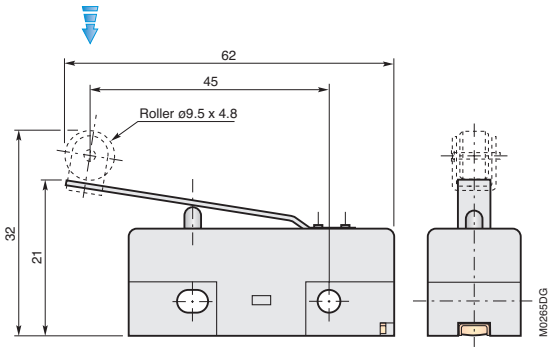

R1L10, R1L10G

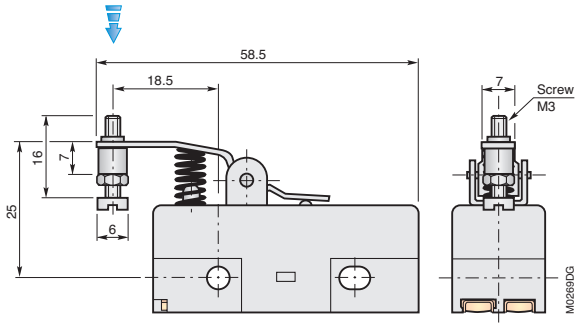

X4L35V

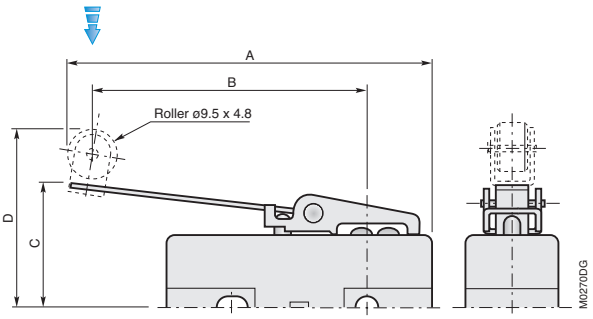

X1L20, X1L21, X1L24, X4NL20, X1L20G, X1L21G, X4NL20G

Microswitches	Types	Dimensions in mm			
		A	B	C	D
with integral lever actuator	X1L20	64	-	26	-
	X1L21	55	-	24	-
	X1L 24	110	-	42	-
	X 4NL20	64	-	26	-
with integral roller lever actuator	X1L20G	64	47	-	35
	X1L21G	55	38	-	35
	X4NL20G	64	47	-	35

Dimensions (continued)

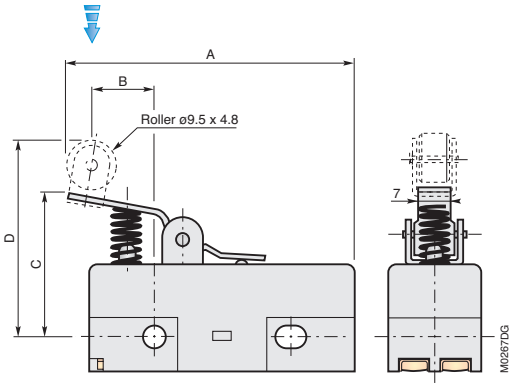

X4L31, X4L30G, X4L31G, X4L35G

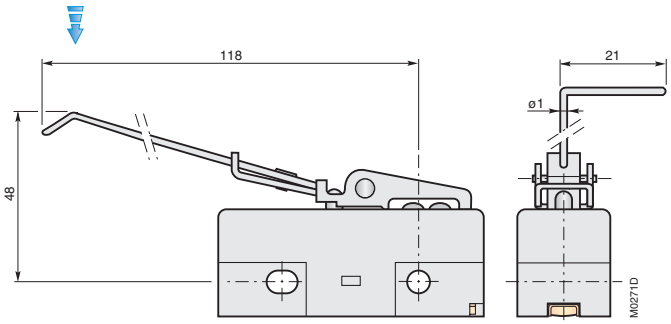

X1L41

Microswitches	Types	Dimensions in mm			
		A	B	C	D
with integral lever actuator	X4L31	60	-	26.5	-
with integral roller lever actuator	X4L30G	62	20	-	38
	X4L 31G	50	8	-	36.5
	X4L35G	60	18	-	35

Accessories

90° Quick connect
6.35 x 0.8 mm terminals

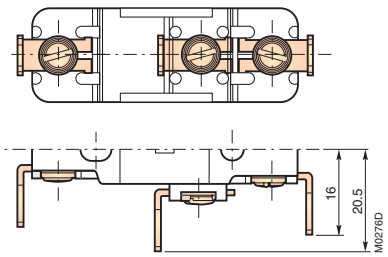

180° Quick connect
6.35 x 0.8 mm terminals

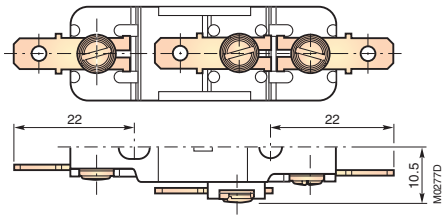

Sealing part for "P20"
plunger actuator

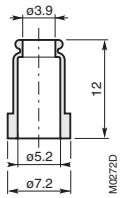

90° Quick connect
6.35 x 0.8 mm terminals

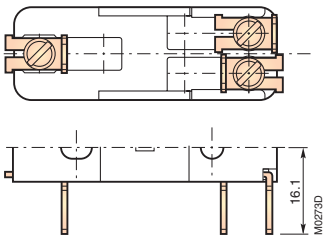

Screw terminals with
insulating plate

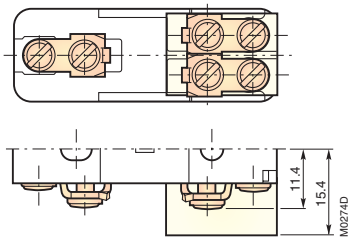

Terminal enclosure

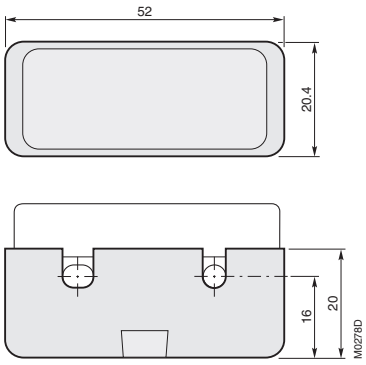

M (Low travel) & CM (Low operating force) Microswitches

PETERCEM

Application

Microswitch for industrial applications.

- Operating temperature: -25 °C ... +85 °C.
- 2 available product types according to pin actuator position:
  - low travel device **"M",**
  - low operating force device **CM.**
- Mechanical service life: 1 000 000 cycles.

Description

Snap action switch - unsealed.

- Plastic casing.
- Silver contacts.
- Mounting holes for M2 screws.
- Pin actuator or auxiliary actuator (accessory).
- Terminals: solder terminals.

Mechanical characteristics

Characteristics according to the actuating point (arrow) indicated on dimension drawings.

M type - Low travel		**M11A1**	**M11L26**	**M11L26G**	**M11L27G**
Max. operating force	**N**	1.90	0.50	0.50	0.90
Pretravel	**mm**	0.30 ... 0.80	2.50 ... 7.0	2.50 ... 7.0	0.80 ... 2.10
Differential movement	**mm**	0.08 ... 0.20	0.50 ... 2.0	0.75 ... 2.0	0.25 ... 0.60
Min. overtravel (1)	**mm**	0.50	1.50	1.50	0.60
Pin actuator position: "A" dimension	**mm**	12.7	12.7	12.7	12.7

(1) Do not exceed this value in use.

Pin actuator position
dimension A: 12.7 mm or 3.2 mm

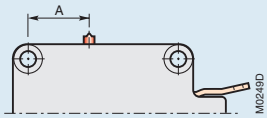

Characteristics according to the actuating point (arrow) indicated on dimension drawings.

CM type - Low operating force		**CM11A1**	**CM21A1**	**CM31L10G**	**CM31L25**	**CM11L41**	**CM11L43**
Max. operating force	**N**	0.35	0.50	2.0	0.07	0.03	0.04
Pretravel	**mm**	0.40 ... 1.0	0.70 ... 1.20	0.60 ... 1.50	17.0 max.	10.0 ... 17.0	12.0 max.
Differential movement	**mm**	0.2 ... 0.60	0.3 ... 0.60	0.25 ... 0.80	11.50 max.	4.0 ... 12.0	7.0 max.
Min. overtravel (1)	**mm**	1.50	1.50	0.30	10.0	20.0	10.0
Pin actuator position: "A" dimension	**mm**	3.2	3.2	3.2	3.2	3.2	3.2

(1) Do not exceed this value in use

Electrical characteristics

Types		**M**		**CM**			
Ratings (electrical load on one throw only)		**30 ... 48Vd.c.**	**125Va.c.**-50Hz	**220V a.c.**-50Hz	**30 ... 48Vd.c.**	**125Va.c.**-50Hz	**220Va.c.**-50Hz
– resistive load	**A**	4	10	5	2	5	3
– inductive load	**A**	2 (L/R ≤ 5 ms)	5 (cos φ ≥ 0.5)	3 (cos φ ≥ 0.5)	1 (L/R ≤ 5 ms)	2.5 (cos φ ≥ 0.5)	1.5 (cos φ ≥ 0.5)
Electrical service life	**cycles**	100 000					
Dielectric strength (50 Hz - 1 mn)							
– between terminals	V a.c.	500					
– between all terminals and earth (ground)	V a.c.	1500					

Specific Products - Contact us for more information ; data sheet on request.

- Devices with quick connect 2.8 x 0.5 mm terminals are available.
- Product design according to local climatic stress.

Ordering details

	Pin actuator position mm	P/N	Weigh (1piece) kg
Microswitch with pin actuator			
Low travel	12.7	**M11A1**	0.006
Low operating force	3.2	**CM11A1**	0.006
		CM21A1	10.006
Microswitch with flexible roller lever actuator			
Low operating force	3.2	**CM31L10G**	0.007
Microswitch with integral lever actuator			
Low operating force	3.2	**CM31L25**	0.008
Low travel	12.7	**M11L26**	0.008
Microswitch with integral roller lever actuator			
Low travel	12.7	**M11L26G**	0.008
		M11L27G	0.008
Microswitch with wire rod actuator			
Low operating force	3.2	**CM11L41**	0.007
Microswitch with spring lever actuato			
Low operating force	3.2	**CM11L43**	0.008

Note: Only above listed product types are available.

CM11A1

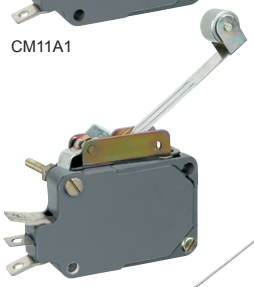

M11L26G

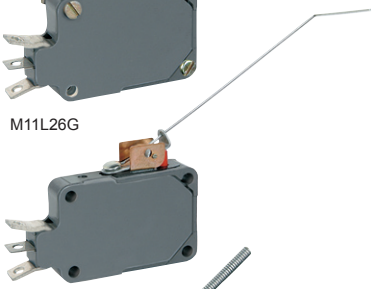

CM11L41

CM11L43

Circuit diagram

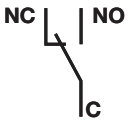

Connection

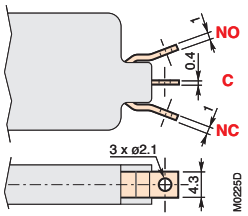

Dimensions

M type - Low travel

Mounting holes for M2 screws - Recommended tightening torque: 0.25 to 0.30 Nm

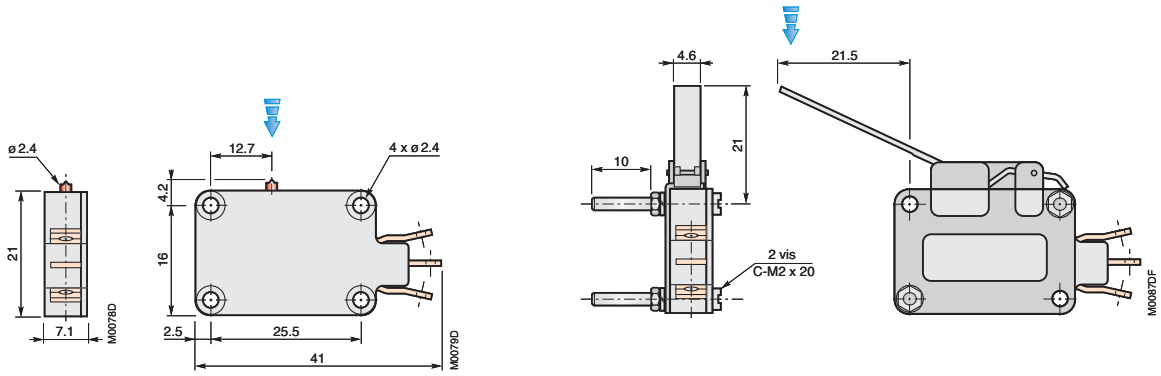

Dimensions

M type - Low travel
Mounting holes for M2 screws - Recommended tightening torque: 0.25 to 0.30 Nm

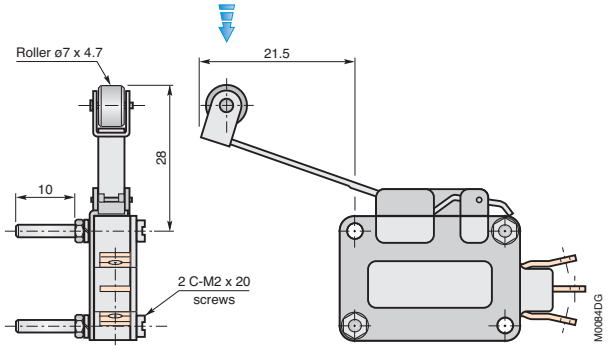

M11L26G

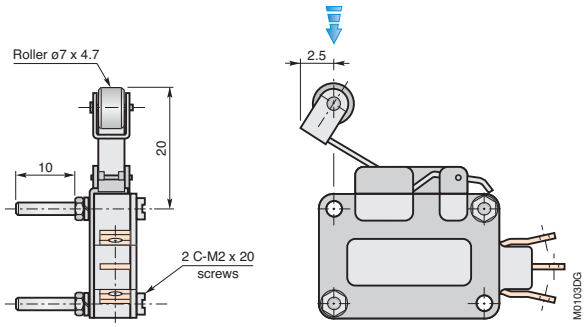

M11L27G

CM type - Low operating force
Mounting holes for M2 screws - Recommended tightening torque: 0.25 to 0.30 Nm

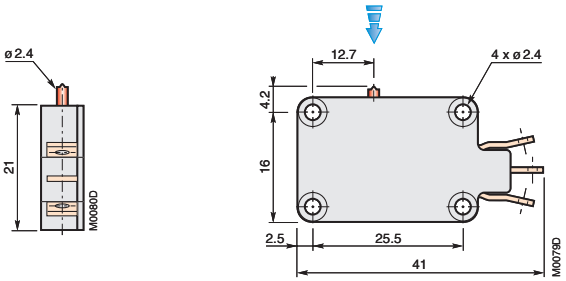

CM11A1

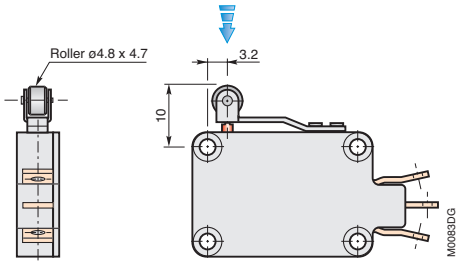

C31L10G

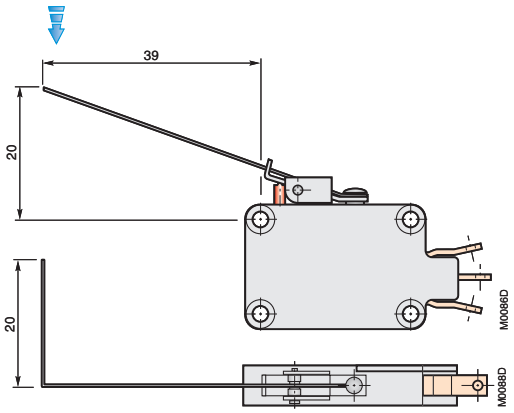

CM11L41

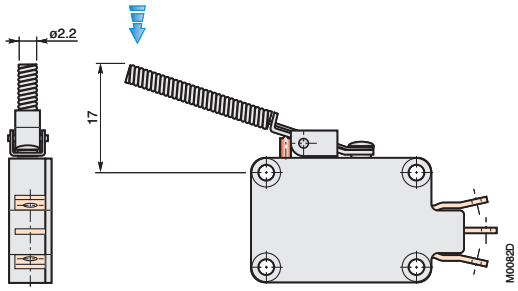

CM11L43

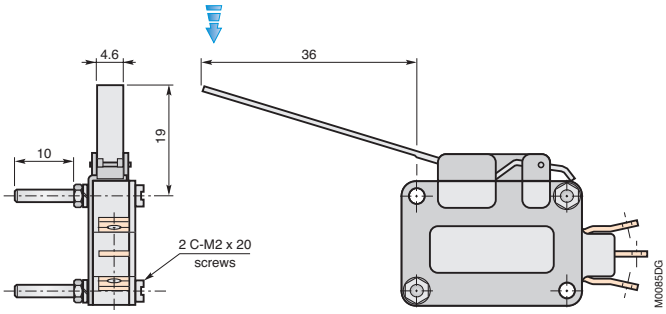

CM31L25

IE Watertight Microswitches

PETERCEM

Application

Microswitch for industrial applications where watertightness is required.

- Operating temperature: -20 °C ... +85 °C.
- Rated breaking capacity: from few mA up to 5 amperes.
- Degree of protection: IP66 / IP67.
- Mechanical service life: 1 000 000 cycles..

Description

Environment sealed Microswitch including a snap-action precision switch.

- PA66 polyamide casing.
- Gold plated silver contacts.
- Mounting holes for M3 screws ; mounting centres available: 14 or 19 mm.
- Connections: 3 wiring options in 2 available configurations:
  - 0.75 mm² H05 V-K leadwires - PVC insulated,
  - 2 or 3 x 0.75 mm² A05 VV-F cable - PVC insulated.
- Pin actuator.

Environmental characteristics

(For other test results, please contact us)

Salt spray resistance	48 hours
Humidity	93 % relative humidity, +40 °C duration 168 hours (7 days)
Sinusoidal vibrations	5 _ 500 Hz, 10 g in each of 3 orthogonal axis

Mechanical characteristics

Characteristics according to the actuating point (arrow) indicated on dimension drawings.

Watertight Microswitches		**IE...F**, leadwires terminals / **IE...C,** cable terminals
Max. operating force	**N**	2.0
Min. release force	**N**	0.40
Max. pretravel	**mm**	1.0
Max. differential movement	**mm**	0.45
Min. overtravel(1)	**mm**	0.50

(1) Do not exceed this value in use

Electrical characteristic

Ratings (electrical load on one throw only)		**30 V** d.c.	**125 V** a.c. - 50 Hz	**250** V a.c. - 50 Hz
– resistive load	**A**	50 mA ... 2 A	5 A	2 A
– inductive load	**A**	25 mA ... 1 A (L/R ≤ 5 ms)	2.5 A (cos φ ≥ 0.3)	1.0 A (cos φ ≥ 0.3)
Electrical service life	**cycles**	100 000		
Dielectric strength (50 Hz - 1 mn)				
– between terminals	**V a.c.**	500 V a.c.		
– between all terminals and earth (ground)	**V a.c.**	1500 V a.c.		
Insulation resistance	**MΩ**	≥ 100 MΩ under 500 V d.c. (at 23 °C with < 80 % relative humidity)		

Specific Products - Contact us for more information ; data sheet on request.

"ATEX" devices for use in explosive atmospheres - equipment group / category II2GD - according to Directive 94/9/CE .

Coding (example)

IE2 4 2 F

IE .... Watertight Microswitch

4 .....Fixing centres distance 14 mm
9 .....Fixing centres distance 19 mm

C..... Cable terminals
F..... Leadwires
See Description section

1..... C-NC Wiring options
2..... C-NO Wiring option
3..... Changeover contact

Ordering details

Standard leadwire length = 0.5 m or cable length = 1 m; other length on request.

Fixing centres de fixation mm	Wiring options	P/N	Weight (1 piece) kg
Microswitch with leadwires terminals			
14	C – NC	**IE241F**	0.040
	C – NO	**IE242F**	0.040
	Changeover contact	**IE243F**	0.050
19	C – NC	**IE291F**	0.040
	C – NO	**IE292F**	0.040
	Changeover contact	**IE293F**	0.050
Microswitch with cable terminals			
14	C – NC	**IE241C**	0.070
	C – NO	**IE242C**	0.070
	Changeover contact	**IE243C**	0.080
19	C – NC	**IE291C**	0.070
	C – NO	**IE292C**	0.070
	Changeover contact	**IE293C**	0.080

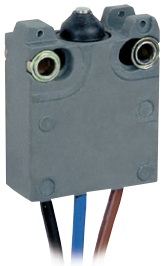

IE ... F

IE ... C

Consult us if you need an actuating lever or other accessories.

Circuit diagram - Connection

Changeover contact

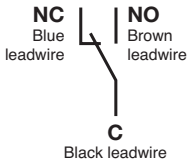

C-NC Wiring options

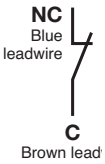

C-NO Wiring options

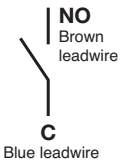

Dimensions

Mounting holes for M3 screws - Recommended tightening torque: 2 Nm.

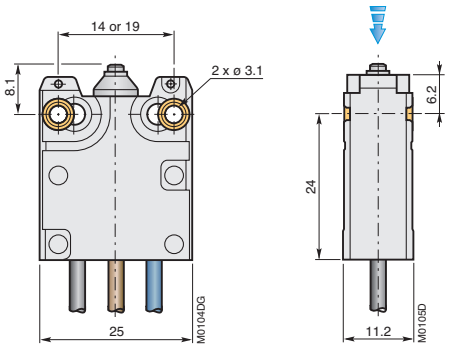

IE ... F

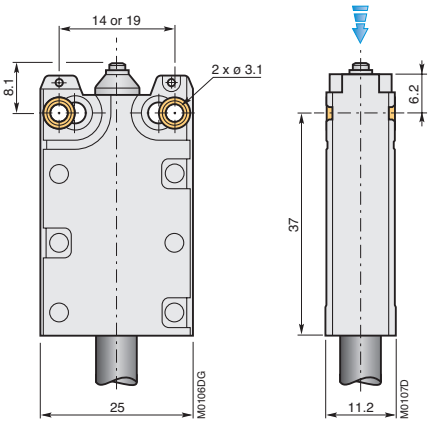

IE ... C

Z3...E Watertight Subminiature Microswitches

PETERCEM

Application

Subminiature Microswitch for use in locations where watertightness is required.

- Operating temperature from -55 °C to +150 °C
- Rated breaking capacity: from few mA up to 4 amperes
- Degree of protection: IP65 / IP67
- Mechanical service life: 500 000 cycles

Description

Environment sealed snap-action switch.

- Plastic casing: PPS Ryton®
- Gold plated contacts.
- Mounting holes for M2 screws.
- Terminal: 0.38 mm² (AWG 22) leadwires*, FEP insulation.
  * Compliant to AIR 4524 specification ; NF L 52-125A Category B of 1971 - lightweight cables. Interchangeability: AICMA No 5116 recommendation of February 1961.
- Pin actuator or integral actuator (factory assembled)..

Environmental characteristics

(For other test results, please contact us)

Salt spray resistance	48 hours
Humidity	93 % relative humidity, +40 °C duration 168 hours (7 days)
Sinusoidal vibrations	5 _ 500 Hz, 10 g dans les 3 axes

Mechanical characteristics

Characteristics according to the actuating point (arrow) indicated on dimension drawings.

Subminiature Microswitches		**Z3AEF**
Max. operating force	**N**	3.3
Min. release force	**N**	0.70
Pretravel	**mm**	0.17 ... 0.42
Max. differential movement	**mm**	0.06
Min. overtravel (1)	**mm**	0.10

(1) Do not exceed this value in use.

Microswitches with integral lever (factory assembled)		**Z3AEF-L20 Z3AEF-L20G**		**Z3AEF-L60 Z3AEF-L60G**		**Z3AEF-L61 Z3AEF-L61G**	
Actuating lever pivot point		A	B	A	B	A	B
Max. operating force	**N**	1.20	0.90	0.90	0.60	1.20	0.90
Min. release force	**N**	0.30	0.20	0.20	0.10	0.30	0.20
Max. pretravel	**mm**	1.35	1.85	2.20	2.90	1.35	1.85
Max. differential movement	**mm**	0.30	0.40	0.60	0.75	0.30	0.40
Min. overtravel (1)	**mm**	0.35	0.65	2.60	3.20	1.30	1.60

(1) Do not exceed this value in use.

Electrical characteristics

Ratings (electrical load on one throw only)		**5 mV ... 30 V d.c.**	**30 V d.c.**	**115 V a.c.** - 400 Hz	**220 V a.c.** - 50 Hz
– resistive load	**A**	0.05	4	1	1
– inductive load	**A**	0.025 (L/R ≤ 5 ms)	0.5 (L/R ≤ 5 ms)	–	0.5 (cos φ ≥ 0.3)
Electrical service life	**cycles**	100 000			
Changeover time	**ms**	≤ 10			
Contact resistance	**mΩ**	≤ 25 mΩ under 6 V d.c. – 100 mA according to MIL-PRF-8805 - (As new, wires or cable not included).			
Dielectric strength (50 Hz - 1 mn)					
– between terminals	**V a.c.**	500 V a.c.			
– between all terminals and earth (ground)	**V a.c.**	1500 V a.c.			
Insulation resistance	**MΩ**	≥ 100 MΩ under 500 V d.c. (at 23 °C with < 80 % relative humidity)			

Ordering Details

Standard leadwire length = 0.5 m ; other length on request.

Lever length mm	Actuating lever pivot	P/N	Weight (1 piece) kg
Microswitch with pin actuator			
–	–	**Z3AEF**	0.007
Microswitch with integral lever actuator			
20	A	**Z3AEF-L20A**	0.008
	B	**Z3AEF-L20B**	0.008
Microswitch with integral roller lever actuator			
20	A	**Z3AEF-L20GA**	0.008
	B	**Z3AEF-L20GB**	0.008
Microswitch with added overtravel lever actuator			
30	A	**Z3AEF-L60A**	0.008
	B	**Z3AEF-L60B**	0.008
20	A	**Z3AEF-L61A**	0.008
	B	**Z3AEF-L61B**	0.008
Microswitch with added overtravel roller lever actuator			
30	A	**Z3AEF-L60GA**	0.008
	B	**Z3AEF-L60GB**	0.008
20	A	**Z3AEF-L61GA**	0.008
	B	**Z3AEF-L61GB**	0.008

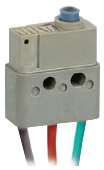

Z3AEF

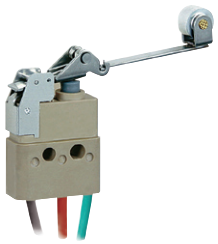

Z3AEF- L60GA

Actuating lever pivot point: **A** or **B**
Due to factory mounting, actuating **lever pivot point** must be defined for Microswitches with integral levers.
See Mechanical characteristics tables for required travel and/or force

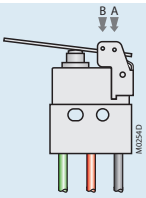

Circuit diagram

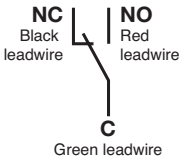

Connection

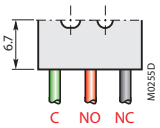

Dimensions

M2 Screw terminals -
Recommended tightening torque: 0.18 to 0.20 Nm.

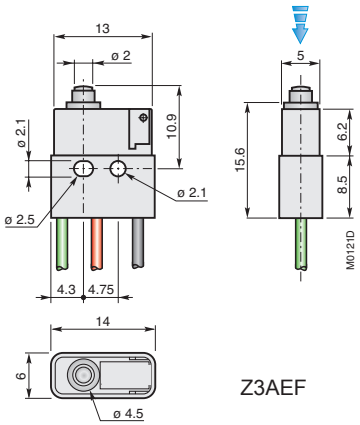

Z3AEF

Dimensions (continued)

Levers	Dim. mm L	Actuating lever pivot point	Dim. mm C
L20	20	A	12.4
		B	12.6
L20G	18.5	A	14.3
		B	14.9
L61	20	A	13.3
		B	13.5
L60	30	A	14.3
		B	14.9
L61G	18.55	A	19.2
		B	19.4
L60G	28.65	A	20.2

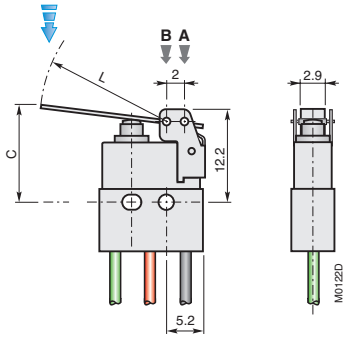

Z3AEF- L20...

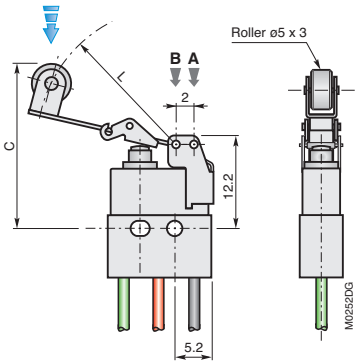

Z3AEF- L20G...

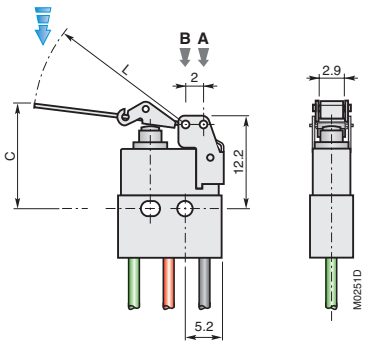

Z3AEF- L60...
Z3AEF- L61...

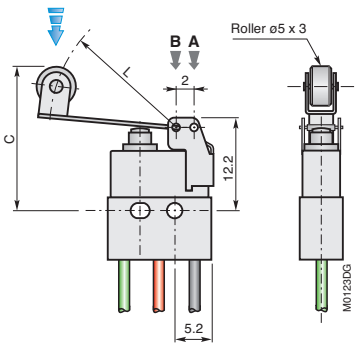

Z3AEF- L60G...
Z3AEF- L61G...

F2 Limit Switches

PETERCEM

Application

Limit switch for aggressive atmospheres: oil and gas industries, power generation...
Devices including 1 or 2 "**R**" type Microswitches.

- Operating temperature:
  – terminal box with cable gland output: -30 ... +85 °C
  – reticulated synthetic rubber insulated cable output: -30 ... +120 °C
  – PVC insulated cable output: -30 ... +65 °C
- Ratings (220 V a.c. - 50 Hz voltage): 2.5 A.
- Degree of protection: IP66 / IP67.
- Mechanical service life: 100 000 cycles.

Description

Environment sealed limit switch including an encapsulated snap-action switch.

- Painted aluminium alloy casing.
- Stainless steel driving shaft.
- Clockwise or counterclockwise operation design available.
- Rotary arm actuator.
- Mounting holes for M5 screws on 4 sides of the casing.
- Available terminations:
  – sealed terminal box with cable-gland integral with the limit switch,
  – reticulated synthetic rubber Varpen® cable insulated, (conductors 1 mm²) or PVC insulated (conductors 1.5 mm²)

Environmental characteristics

(For other test results, please contact us)

Salt spray resistance	96 hours
Temperature variations	-40 °C / +70 °C ; paliers de 30 minutes, 5 cycles
Mechanical shocks	50 g - duration 11 ms (pulse shape = $^1/_2$ sinus) 18 shocks (3 / direction, both of 3 orthogonal axis)
Sinusoidal vibrations	10 _500 Hz, 5g in each of 3 orthogonal axis

Mechanical characteristics

Characteristics according to the actuating point (arrow) indicated on dimension drawings.

F2 Limit switches		**F20LG1R...**	**F21LG1R...**	**F20LG2R...**	**F21LG2R...**
Max. operating force	**N**	9.0	9.0	10.0	11.0
Min. release force	**N**	2.20	2.20	2.20	2.20
Max. pretravel	**degree**	15°	15°	15°	15°
Max. differential movement	**mm**	1.0 ... 3.5	1.0 ... 3.5	1.0 ... 3.5	1.0 ... 3.5
Min. overtravel (1)	**degree**	60°	60°	60°	60°

(1) Do not exceed this value in use

Note: Characteristics recorded with an actuating arm on the limit switch

Electrical characteristics

Ratings (electrical load on one throw only)		**30 ... 48 V d.c.**	**115 V d.c.**	**220 V d.c.**	**250 V a.c. - 50 Hz**
– resistive load	**A**	2.5	1	0.4	2.5
– inductive load	**A**	1.8 (L/R ≤ 40 ms)	0.5 (L/R ≤ 40 ms)	0.25 (L/R ≤ 25 ms)	1.5 (cos φ ≥ 0.3)
Electrical service life	**cycles**	100 000			
Min. switched current	**mA**	5			
Acceptable overload current without switching					
– permanent service	**A**	9			
– for short time	**A**	60 A (during 100 ms, at ambient temperature)			
Dielectric strength (50 Hz - 1 mn)					
– between terminals	**V a.c.**	500			
– between all terminals and earth (ground)	**V a.c.**	1500			
Insulation resistance	**MΩ**	≥ 100 MΩ under 500 V d.c. (at 23 °C with < 80 % relative humidity)			

Specific Products - Contact us for more information ; data sheet on request.

Among the large number of possible variants, the following ones are offered:

- Devices with connector.
- EDF (French Electricity Supply Board) certified limit switches for nuclear environment use.
- **F5705, F5777** (1-pole) and **F5778**, **F5779** (2-pole) limit switches with Teflon® insulated cables, for operating temperatures up to 160 °C
- The possibility to include **R** type Microswitches whose breaking capacity = 5 Amperes.
- Low differential movement **F22** / **F23** limit switch types.

Ordering details

Standard cable length = 2 m; other length on request.

Connection	Nomber of internal Microswitches	P/N	Weight (1 piece) Kg
Limit switch with roller arm actuator - Counterclockwise operation			
Reticulated synthetic rubber insulated cable	1	**F20LG1RC**	0.750
	2	**F20LG2RC**	0.980
PVC insulated cable	1	**F20LG1RC-R6**	0.950
	2	**F20LG2RC-R6**	1.200
Terminal box + cable-gland Ø 6.5 ... 12.5 mm cable diameter	1	**F20LG1R-B13**	0.850
	2	**F20LG2R-B13**	0.900
Terminal box + cable-gland Ø 11.5 ... 19 mm cable diameter	1	**F20LG1R-B21**	0.850
	2	**F20LG2R-B21**	0.900
Limit switch with roller arm actuator - Clockwise operation			
Reticulated synthetic rubber insulated cable	1	**F21LG1RC**	0.750
	2	**F21LG2RC**	0.980
PVC insulated cable	1	**F21LG1RC-R6**	0.950
	2	**F21LG2RC-R6**	1.200
Terminal box + cable-gland Ø 6.5 ... 12.5 mm cable diameter	1	**F21LG1R-B13**	0.850
	2	**F21LG2R-B13**	0.900
Terminal box + cable-gland Ø 11.5 ... 19 mm cable diameter	1	**F21LG1R-B21**	0.850
	2	**F21LG2R-B21**	0.900

F20LG2R-B13

F21LG1RC-R6

Note: Characteristics recorded with an actuating arm on the limit switch.
Limit switches are supplied with factory mounted (standard) actuating roller arm.
Different actuating arms are available as accessories (see accessories table on next page).
Actuating operation direction is factory defined and cannot be modified.

Coding (example)

F2 0 LG 1R - C-R6

- F2 .....Limit switch
- 0 .....Counterclockwise operation
  1 .....Clockwise operation
- LG .....Roller lever actuator supplied
- 1R .....1-pole limit switch including 1 Microswitch
  2R .....2-pole limit switch including 2 Microswitches
- B 13.....Cable-gland PE 13 Terminal box output
  B 21.....Cable-gland PE 21 Terminal box output
- C.....Cable terminals
- C-R6.....Cable terminals Cable specification

Actuating operation

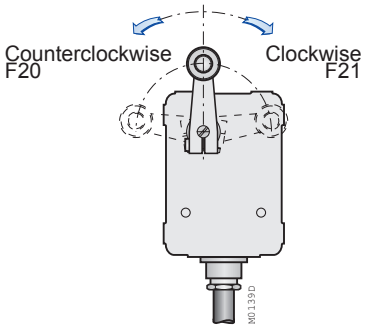

Ordering details - Accessories

Accessory	P/N	Weight (1piece) kg
Double roller arm	**LSG**	0.080
Adjustable roller arm	**LRG**	0.100
Fixing plate	**FPTN404595R0001**	0.050

Note: Screws are supplied with the fixing plate.

Many others actuating arms are available: spring rod, bronze or stainless steel roller arm…
Do not hesitate to consult us.

F2 ... + LRG lever
+ fixing plate

Circuit diagram - Connection

F20 / F21LG1RC

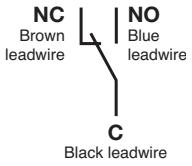

F20 / F21LG1R-B
F20 / F21LG1RC-R6

(Terminals or leadwires identification number)

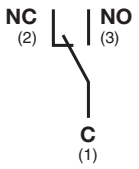

F20 / F21LG2RC

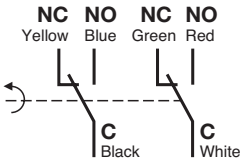

F20 / F21LG2R-B...
F20 / F21LG2RC-R6

(Terminals or leadwires identification number)

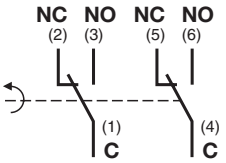

Dimensions (in mm)

Mounting holes for M5 screws - Recommended tightening torque: 6.0 Nm.

F20LG1R -B ... / F21LG1R - B ...

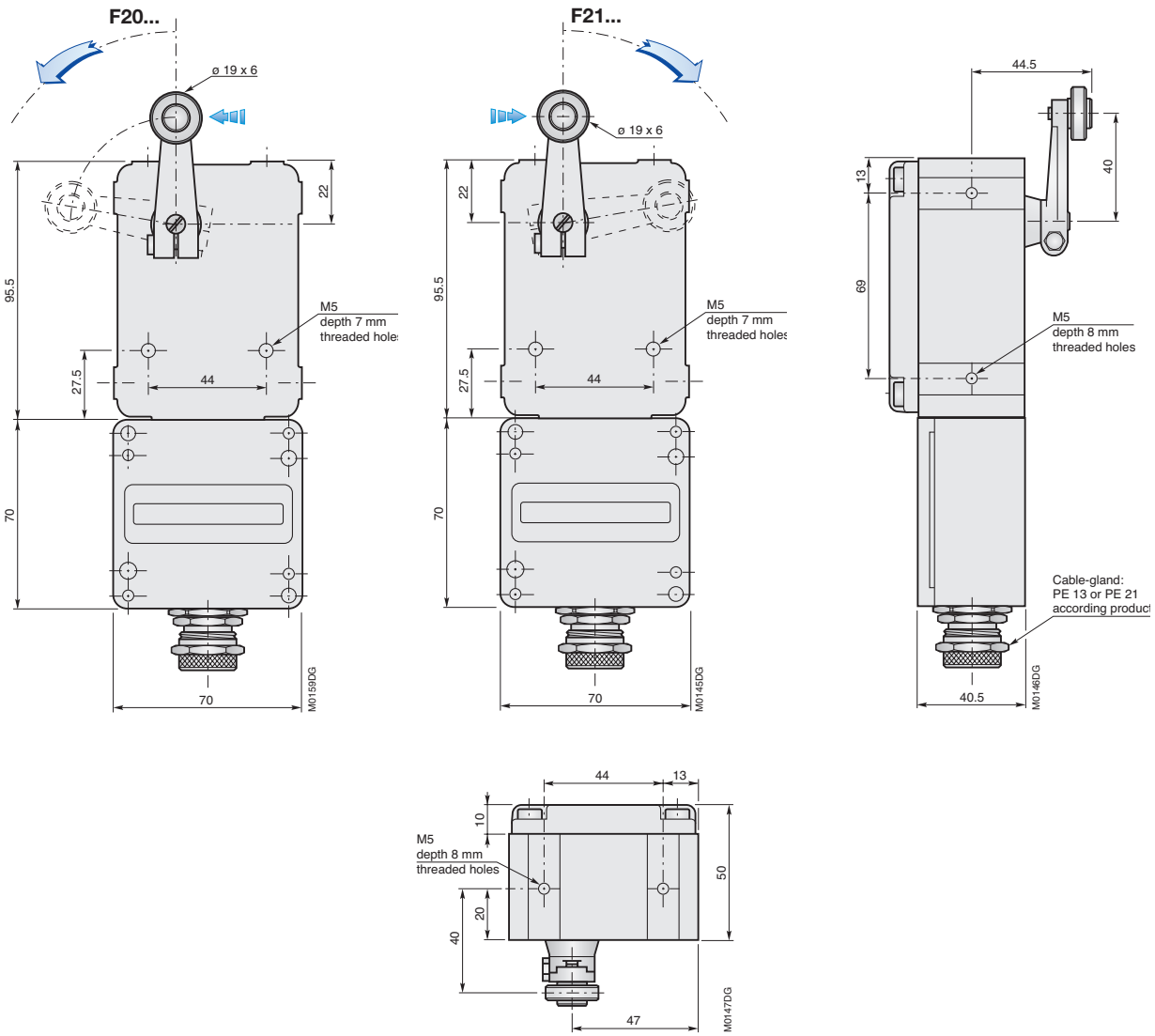

Refer to mounting instructions :

– FPTM 91047 .....**for limit switches with terminal box**
– 1SBC148004M1700.....**for fixing plates**

Dimensions (continued)

Mounting holes for M5 screws - Recommended tightening torque: 6.0 Nm.

F20LG1RC ... / F21LG1RC ...

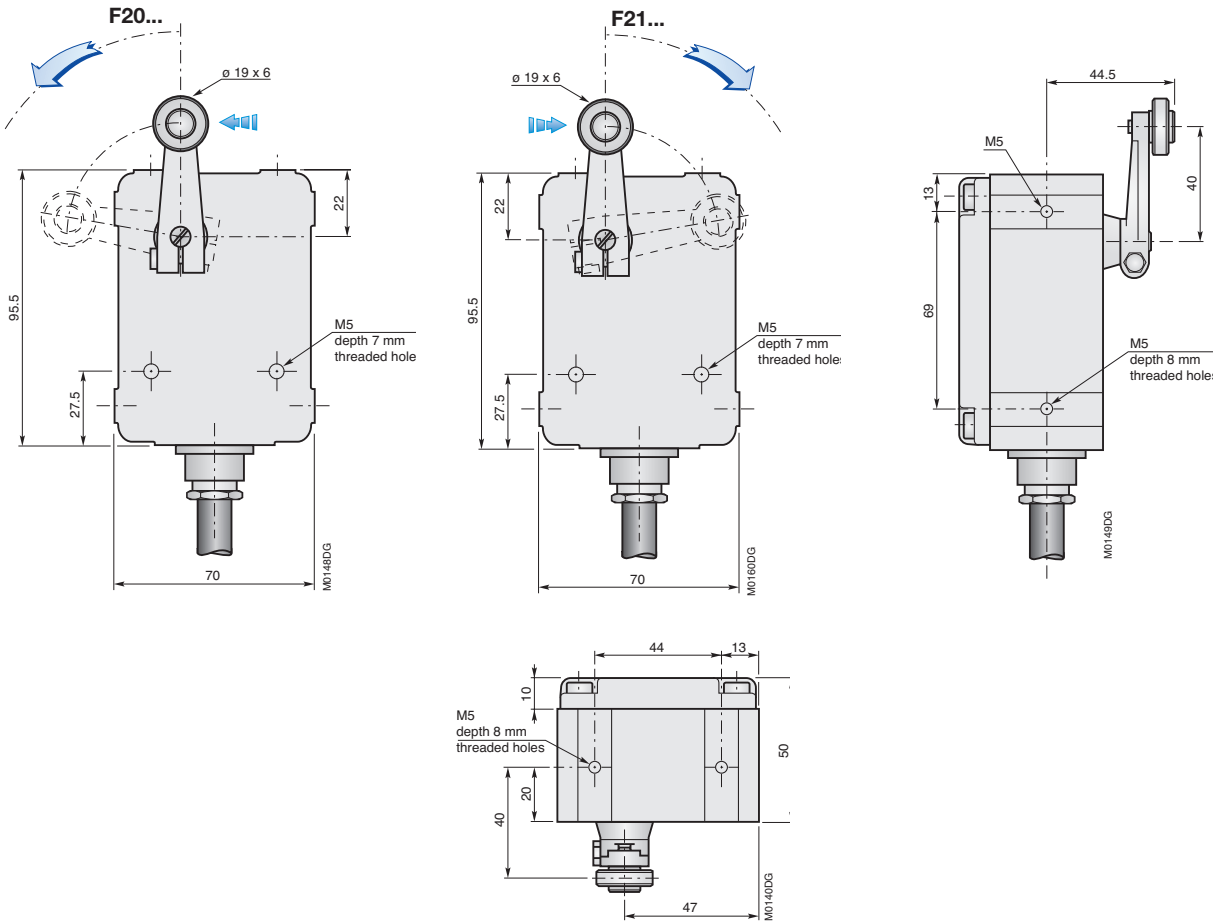

Accessories

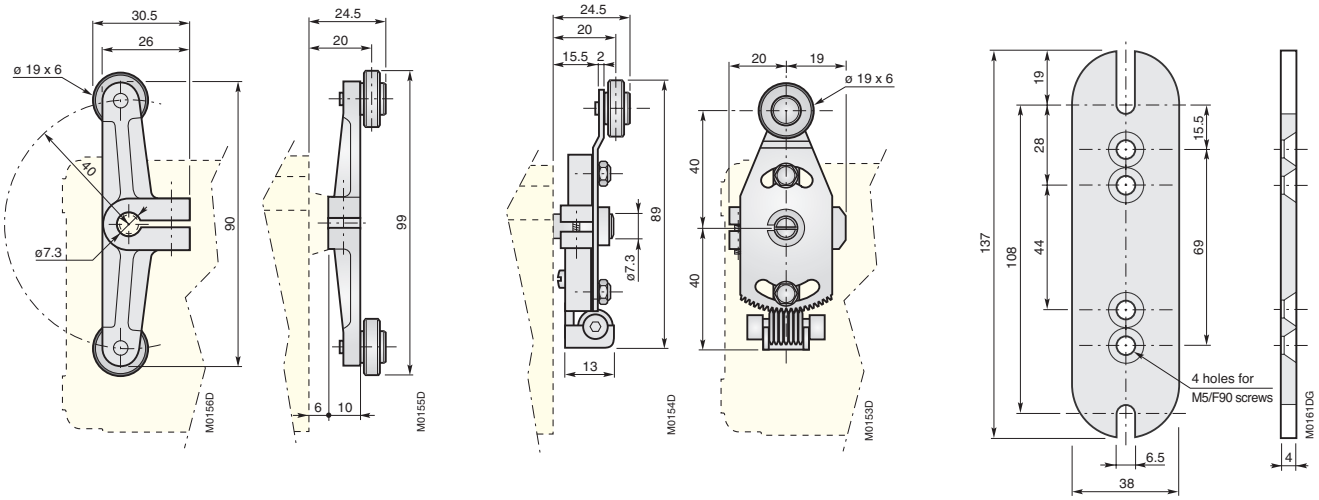

Levers **LSG** **LRG** **Fixing plate**

Refer to mounting instructions :
– FPTM 91047 .....**for limit switches with terminal box**
– 1SBC148004M1700.....**for fixing plates**

F3 Limit Switches

PETERCEM

Application

Limit switch for salt, wet, dusty or corrosive atmospheres. Devices including 2 **"R"** type Microswitches.

- Operating temperature: -25 °C ... +85 °C.
- Ratings (220 V a.c. - 50 Hz voltage): 2.5 A.
- Degree of protection: IP66 / IP67.
- Mechanical service life: 100 000 cycles.

Description

Environment sealed limit switch including an hermetically sealed snap-action switch.

- Bronze casing.
- Stainless steel driving shaft.
- Clockwise or counterclockwise operation design available.
- Rotary arm actuator (accessory).
- Mounting holes for M6 screws on 4 sides of the casing.
- Connection: 7 x 0.34 mm² cable, according to French Navy 6145 DJ standard.

Approvals and Compliance to Standards

Limit switch compliant with DCN (French Navy) requirements and technical specifications.
Approval as per letter STCAN 117.173 dated 1966 April 28, and test report 1.284 dated 1966 April 13.

Mechanical characteristics

F3 Limit switches		**F32-2RC**	**F33-2RC**
Max. operating torque	**Nmm**	400	400
Max. release torque	**Nmm**	88	88
Pretravel	**degree**	18° ... 25°	18° ... 25°
Max. differential movement	**degree**	1° ... 6°	1° ... 4°
Max. overtravel (1)	**degree**	50°	50°

(1) Do not exceed this value in use

Note: Characteristics recorded with an actuating arm on the limit switch.

Electrical characteristics

Ratings (electrical load on one throw only)		**30 ... 48 V d.c.**	**115 V d.c.**	**220 V a.c. - 50 Hz**	**220 V a.c. - 400 Hz**
– resistive load	**A**	2.5	1	2.5	2.5
– inductive load	**A**	1.8 (L/R ≤ 50 ms)	0.5 (L/R ≤ 50 ms)	1.5 (cos φ ≥ 0.3)	–
Electrical service life	**cycles**	100 000			
Contact resistance	**mΩ**	≤ 60 mΩ under I = 1 A (As new, wires or cable not included)			
Dielectric strength (50 Hz - 1 mn)					
– between terminals	**V a.c.**	500			
– between all terminals and earth (ground)	**V a.c.**	1500			
Insulation resistance	**MΩ**	≥ 100 MΩ under 500 V d.c. (at 23 °C with < 80 % relative humidity)			

Ordering Details

Standard cable length = 2 m ; other length on request.

	P/N	**Weight (1 piece) kg**
Counterclockwise operation	**F32-2RC**	1.600
Clockwise operation	**F33-2RC**	1.600

Note: Characteristics recorded with an actuating arm on the limit switch.
Actuating operation direction is factory defined and cannot be modified..

F32 -2RC

Attention :
Product code must be ended with the actuating arm code if the actuator needs to be factory assembled.

F32-2RC - **LSG** See accessories table

Accessories Part Number

Basic product Part Number

F3 Limit Switches

Coding (example)

F3 2 - 2R C

F3 .....Waterproof limit switch

2 .....Counterclockwise operation
3 .....Clockwise operation

C .....Cable terminals

2R .....2-pole limit switch including 2 Microswitches

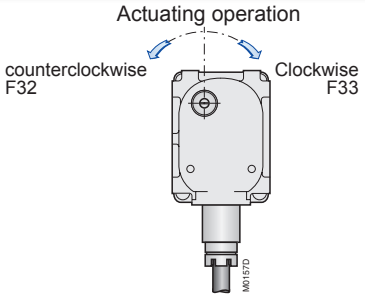

Ordering Details - Accessories

Accessory	P/N	Weight (1 piece) kg
Double roller arm	**LSG**	0.080
Adjustable roller arm	**LRG**	0.100

Circuit diagram - Connection

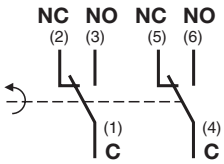

Dimensions (in (mm)

Mounting holes for M6 screws - Recommended tightening torque: 7.0 Nm.

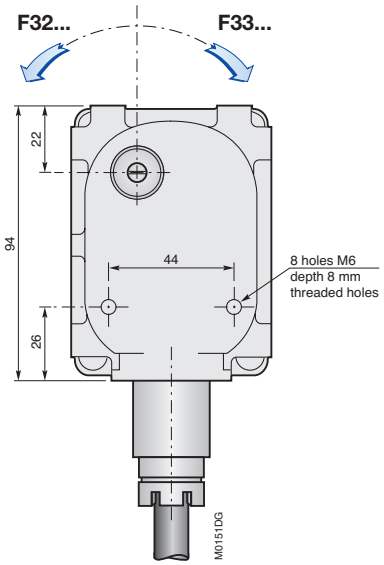

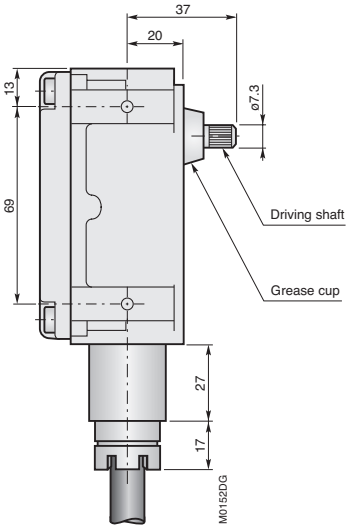

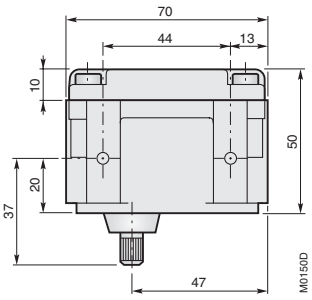

LSG, LRG Levers: see F2 Limit Switches Accessories Dimensions

F4 & FCE Waterproof Limit Switches - French Navy

PETERCEM

Application

Limit switch for submarine applications according to specifications of the French Navy.

- Operating temperature: -25 °C ... +85 °C .....for **F4** types,
  -30 °C ... +70 °C .....for **FCE** types.
- Permissible pressure: 60 bars absolute .....for **F4** types,
  95 bars absolute .....for **FCE** types.
- Degree of protection: IP68.
- Mechanical service life: 100 000 cycles.

Description

Two pole limit switches (Two Single Pole Double Throw circuits).

- Bronze casing.
- Stainless steel driving shaft.
- Rotary roller actuator arm.
- Specific connector output.
- Equipressure operation for **FCE** type.
- Internal Microswitches "**R**" type ..... for **F4 range**,
  "**H**" type ..... for **FCE range**.

Approvals and Compliance to Standards

DCN (French Navy) approved limit switches according to technical specifications : MAT 658-0043 (F44 / F45) or MAT 658-0002 (FCE).

Mechanical characteristics

Characteristics according to the actuating point (arrow) indicated on dimension drawings.

Limit switches		**F44, F45**	**FCE**
Max. operating torque	**Nm**	0.48	0.70
Pretravele	**degree**	25° max.	15° ±2°
Differential movement	**degree**	3° ... 8° max.	1° ... 3°
Overtravel (1)	**degree**	60° max.	not measured : total travel 43° min

(1) Do not exceed this value in use.

Electrical characteristics

For these devices, electrical data and environmental capabilities are available only on request.

Ordering Details

Please contact us for product codification or conformity with NATO product code.

	P/N	**Weight (1 piece) kg**
Counterclockwise operation		
DCIH 51-7P (Deutsch) receptacle	**F44-2RD**	3.500
REC M10 MT0720 (Souriau) receptacle	**F44-2RJU**	3.500
JCI EE M B1 (Souriau) receptacle	**FCE.02.G21.RG**	4.000
Clockwise operation		
DCIH 51-7P (Deutsch) receptacle	**F45-2RD**	3.500
REC M10 MT0720 (Souriau) receptacle	**F45-2RJU**	3.500
JCI EE M B1 (Souriau) receptacle	**FCE.02.G21.RD**	4.000

F44-2RJU

FCE.02.G21 ...

Ordering Details - Accessories

	P/N	Weight (1piece) kg
Double roller arm	**LSG**	0.080
Adjustable roller arm	**LRG**	0.100
Double roller arm for "FCE" limit switch	**FPTN304669R0014**	0.080

Circuit - Connection

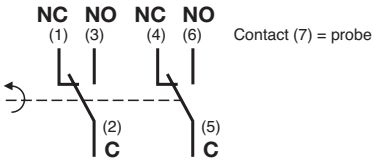

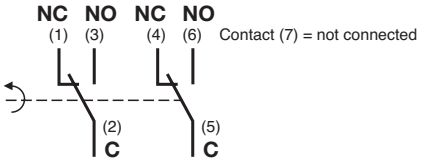

Dimensions

Wiring instructions and other specificities according to data sheets.

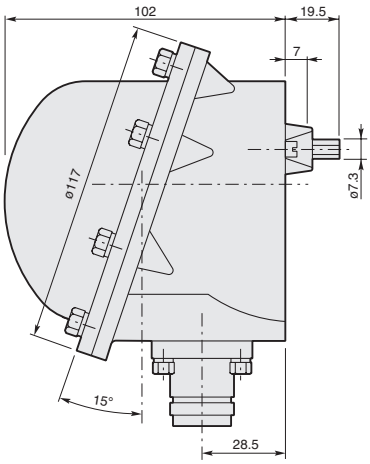

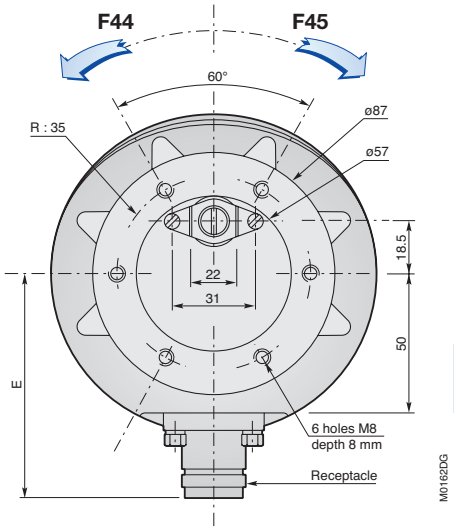

F44... / F45...

Limit switches	Dim. E in mm	Receptacle
F44-2RD / F45-2RD	80	DCIH 51-7P
F44-2RJU / F45-2RJU	73	REC M10M T 07.20

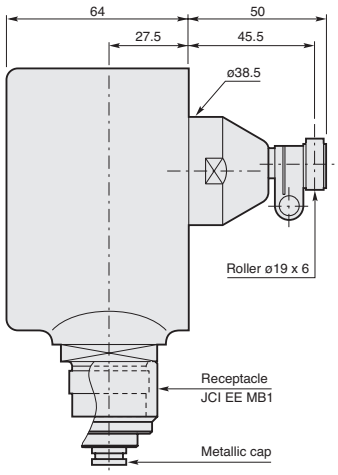

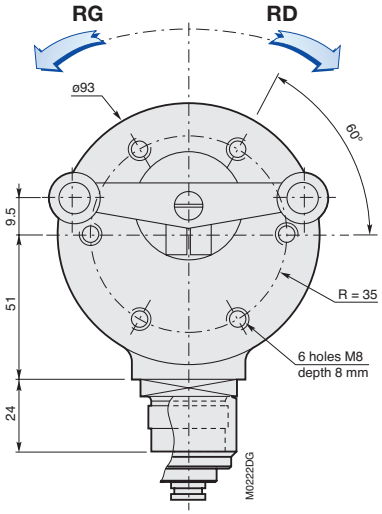

FCE...

LSG, LRG levers : see F2 Limit Switches Accessories Dimensions

Manual Control Switches

PETERCEM

Application

Switch assemblies for command and control systems…

- Operating temperature: -55°C ... +85 °C.....with **H5459** or **H5463** Microswitches
  -55°C ... +150 °C.....with **H5461** or **H5467** Microswitches
- 2 available contact configurations: up to 200 mA for low level applications or 4 A.
- 2 product types according to operating mode:
  – 2 maintained positions toggle switch,
  – momentary action for button or pushbutton switches
- Mechanical service life: 20 000 cycles.

Description

Manual control switches including snap-action switches.

- **"H"** type Microswitches ; 4 variants available :
  – **H5459** ..... code : **59**
  – **H5461** ..... code : **61**
  – **H5463** ..... code : **63**
  – **H5467** ..... code : **67**
- 1 to 4-poles.
- Panel mounting by way of M12 or M14 threaded bushing for sealed pushbutton.
- Fork terminals.
- Operating option: – toggle switch..... **"L"**
  – metallic round button ..... **"P"**
  – plastic round button ..... **"P"** + colour code
  – metallic sealed pushbutton ..... **"PE"** + colour coder

Electrical characteristics

See **"H"** types data for Microswitches assembled into manual control switches.

Ordering Details

Operating mode	Mounting bushing diameter	Microswitch type	P/N	Weight (1 piece) kg
Lever	M12	**H5459** **H5461** **H5463** **H5467**	☐2L59 ☐2L61 ☐2L63 ☐2L67	≤ 0.040
Metallic round button	M12	**H5459** **H5461** **H5463** **H5467**	☐2P59 ☐2P61 ☐2P63 ☐2P67	≤ 0.040
Plastic round button	M12	**H5459** **H5461** **H5463** **H5467**	☐2P ☐59 ☐2P ☐61 ☐2P ☐63 ☐2P ☐67	≤ 0.040
Metallic sealed pushbutton	M14	**H5459** **H5461** **H5463** **H5467**	☐4PE ☐59 ☐4PE ☐61 ☐4PE ☐63 ☐4PE ☐67	≤ 0.055

☐to be completed with bellow codes.

42L59

32PN61

24PER67

Coding (example)

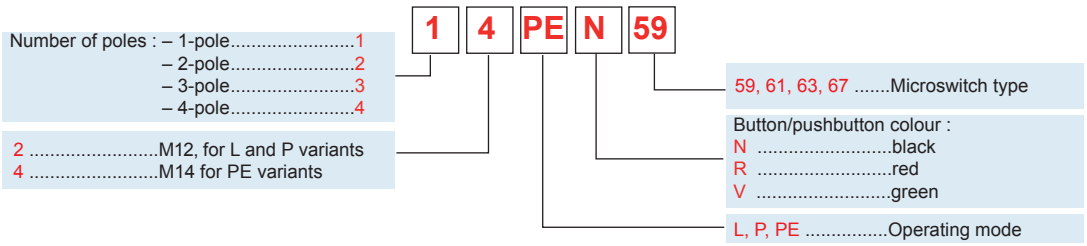

Circuit diagram

- 1 to 4-poles pushbutton switch

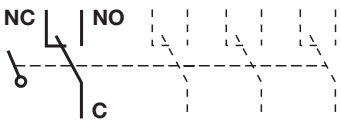

- 1 to 4-poles toggle switch

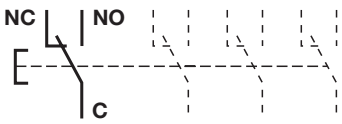

Connection

- "F" Fork terminals

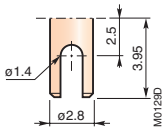

Dimensions

Toggle switch _2L...

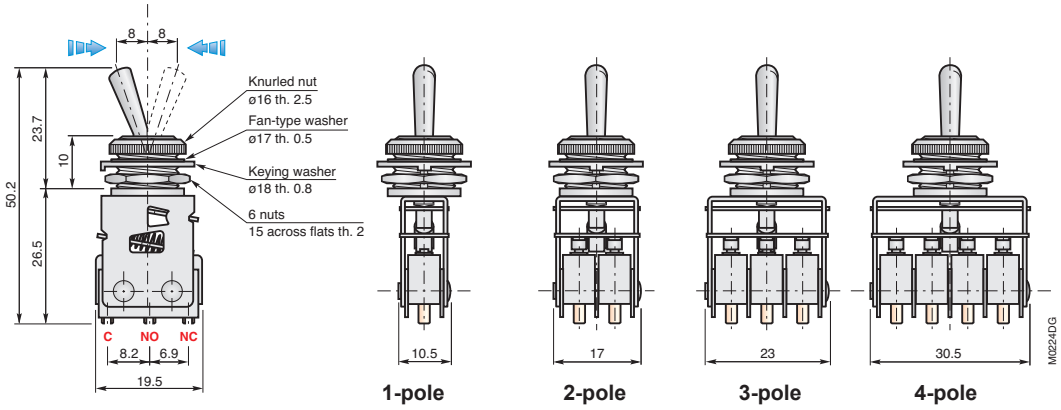

Panel hole detail

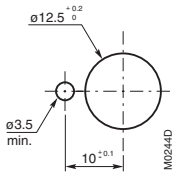

Thickness panel 3.5 max.

Pushbutton switch _2P...

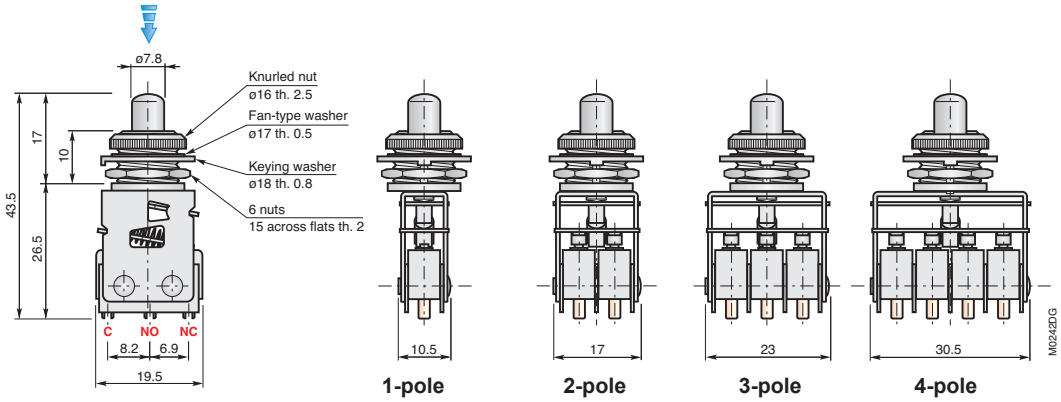

Panel hole detail

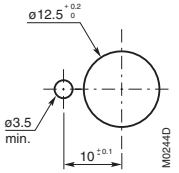

Thickness panel 3.5 max.

Sealed puhsbutton switch _4PE...

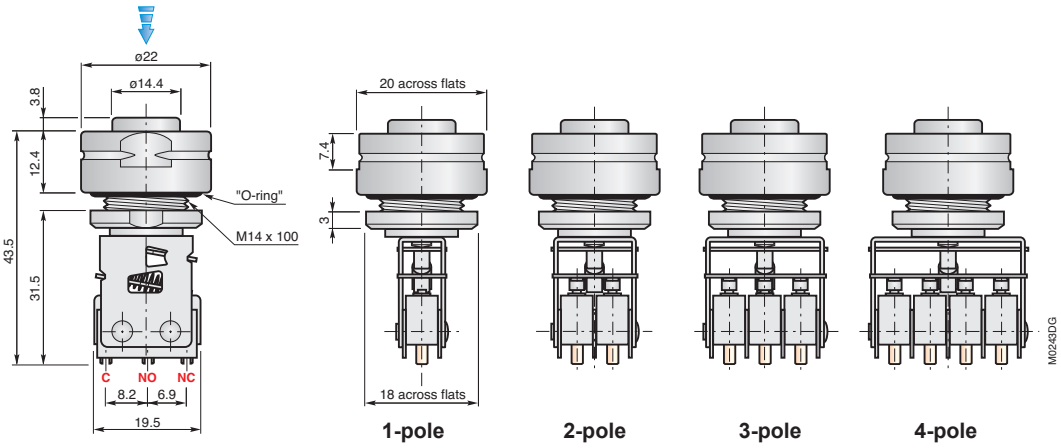

Panel hole detail

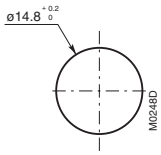

Thickness panel 2.5 max.

CM5200 Ellapsed time indicators

PETERCEM

Application

Ellapsedtime indicator for severe environments : humidity, corrosion, shock and vibrations, extreme temperatures…

- operating temperature : -55 ... +125 °C
- Precision : ± 1%
- Registering capacity : 999.9 hours on standard or 9999 hours (with H letter at the end of the Part Number).

Description

Waterproof ellapsed time indicator without zero return.

- Metallic box with black flat paint finish.
- Intern mechanism in neutral atmosphere.
- Front mounting.
- Connection : Solder terminals (for 0.75 mm² cable max.).

Approval and Compliance to Standards

Qualifications tests for Standards : **MIL-STD-202, MIL-M-7793, NF C 42-310, NF C 20-700**.

Electrical characteristics

Ellapsed time indicator	**CM52xx**
Consumption under Un	100 mW Maxi.
Dielectric strength (50Hz - 1mn)	
- between all terminals and earth (ground) **V a.c.**	500
Insulation resistance **mΩ**	≥ 1000 mΩ under 500 Vdc (at 23 °C with < 80% relative humidity)
Voltage **Vdc**	10 ... 34 Vdc

Environmental characteristics

(For other test results, please contact us)

Salt spray resistance	96 hours
Humidity	93% relative humidity, +40 °C duration 1344 hours (56 days)
Mechanical shocks resistance	100 g - duration 6 ms 18 shocks (3 / direction, both of 3 orthogonal axis)
Sinusoidal vibrations	10 _ 2000 Hz, 10 g in each of 3 orthognal axis
Vibrations	40 g - duration 6 ms 6000 vibrations (1000 / direction, both of 3 orthogonal axis)

Ordering details

Mounting type (1) et (2)	**P/N**	**Weight (1 piece) kg**
Front mounting; hole Ø 3.2	**CM5200**	0.017
"Empty" box	**CM5203**	0.013
Horizontal mounting lug; hole Ø 3.2	**CM5204**	0.015
Horizontal mounting lug; 4.40 NC 2B screws	**CM5204T**	0.015
Mounting on partition; cutout Ø 19.5	**CM5205**	0.036
Vertical mounting lug; hole Ø 3.2	**CM5207**	0.015
Vertical mounting lug; 4.40 NC 2B screws	**CM5207T**	0.015

Nota :

- Add H letter at the end of the Part Number for a 9999 hours registrer product . Ex : CM5200H

(1) Sealing part supplied when applicable

(2) Position of mounting lug X = 1.6 mm on standard.

Ordering details - Accessories

Accessories	P/N	Weight (1 piece) kg
Mounting clip for CM5203	**BR001**	0.005
Sealing part (spare part) for CM5200	**JT001**	-

- Products in packs of 10.

Dimensions

X = Standard 1.6 mm (other value depending on order, with pitch of 0.8), 20mm maxi..

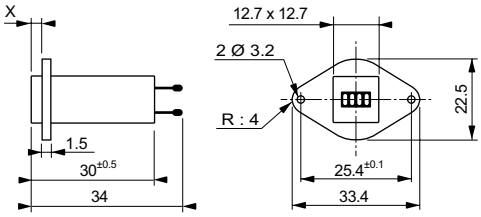

CM5200

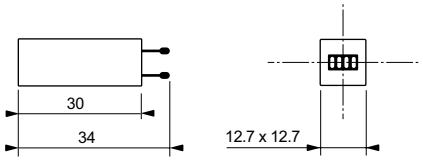

CM5203

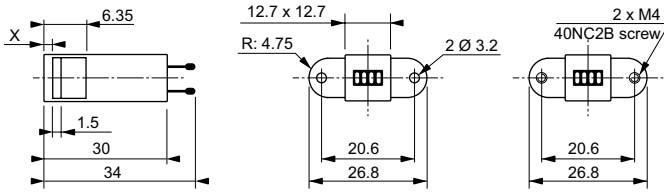

CM5204 / CM5204T

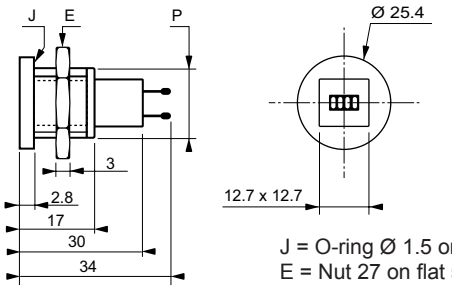

J = O-ring Ø 1.5 on Ø 2.05
E = Nut 27 on flat side
P = Ø 19 pitch 0.5

CM5205 -
Tightening torque : 5 Nm

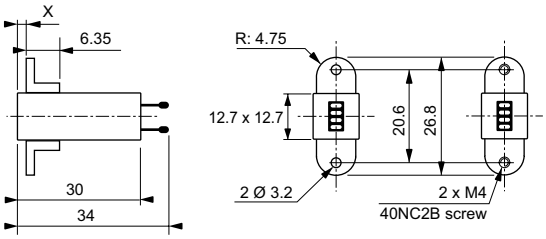

CM5207 / CM5207T

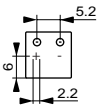

Back

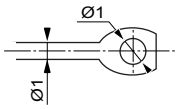

Mounting lug

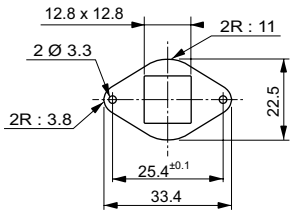

Sealing part JT001

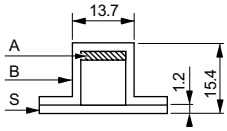

A = Damper
B = Mounting clip
S = Base plate

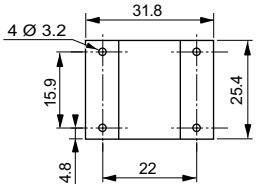

Mounting clip BR001

Definition

A **MICROSWITCH** is a snap-action precision changeover switch.

The snap-action defines a changeover switch whereby contact making and breaking speed is independent of the operating speed of the actuator.
Compared to conventional switches, microswitches have the following distinctive characteristics:
– reduced size,
– reduced operating travel: tenths of a millimetre,
– increased electrical properties,
– increased service life,
– reduced sensitivity to vibrations and high accelerations.

Construction of a Microswitch

Type "H" protected Microswitch

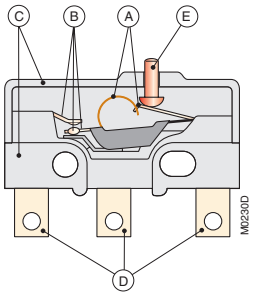

Principal elements :

A snap-action mechanism,
B contacts,
C casing,
D terminals,
E actuator.

Type "T3" hermetically sealed Microswitch

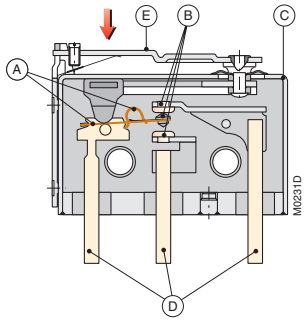

Snap-action Mechanism

The purpose of this element is to press the moving contact mounted on it onto the fixed contacts and to maintain it there by exerting a maximum of "pressure" onto these fixed contacts. The stabilized changeover time obtained, taking into account contact bounce, is very short. When the circuit is opened, this mechanism must also separate the moving contact from the fixed contact instantly and decisively.

Moreover, these functions must be ensured for precise and variable operating travels according to the setting of the mechanism concerned. Being able to set operating travel during factory assembly is one of the key factors for choosing a snap-action mechanism.

Other factors to be considered are:
– the "operating force / pressure force" ratio on the contacts (contact pressure),
– the profile of the elastic elements which make up the mechanism in order to reduce the rate of wear.

The diagrams below illustrate the operating principle of the elastic rotating-spring mechanism used in ABB Microswitches.

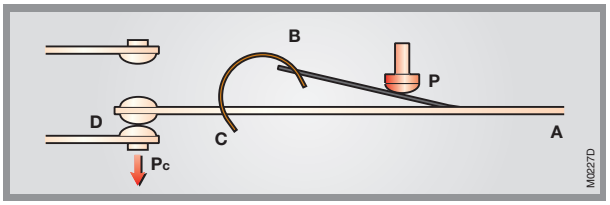

Normal rest position
No force exerted on plunger P.
The rotating spring, forced between the operating blade and the middle blade, generates a contact pressure force on the lower fixed contact Pc. Section PB of the operating blade is flexed upwards.

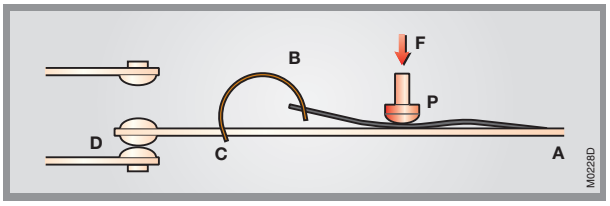

Close to the operating point
When a force F is applied to plunger P, point B comes closer to A and C; it is closer to A at a point in its trajectory situated above the middle blade. It is at this point that the middle blade is subject to maximum stress; changeover starts with the slightest shift below this point, while the rotating spring is still generating a considerable pressure force.

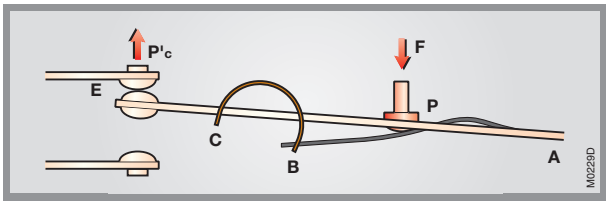

Switched position
Section BP of the blade is flexed downwards. The rotating spring remains stressed by the return force of section BP, thus providing a contact pressure force P'c on the upper fixed contact.

Stabilized Changeover Time

The total time taken by the moving contact to switch from one fixed contact to the other, taking into account contact bounce, is referred to as the **Stabilized changeover time "TPS"**.

It is the sum of:

- the **Transit Time "TT"** taken by the moving contact to leave one fixed contact and touch the other. This property is generally dependant on product design (geometry, component shapes, elasticity of material used, etc.);
- the **Bounce Time "TR"** : due to its speed and in spite of its low mass, the moving contact can, under certain conditions, bounce on the fixed contact, resulting in very short spurious breaks in the electrical circuit.

A low value is the sign of a "healthy" switching mechanism. We guarantee a stabilized changeover time of < 10 ms or < 15 ms for our products, depending on the model. Typically, 5 ms < TPS < 10 ms.

The timing diagram below illustrates these different times.

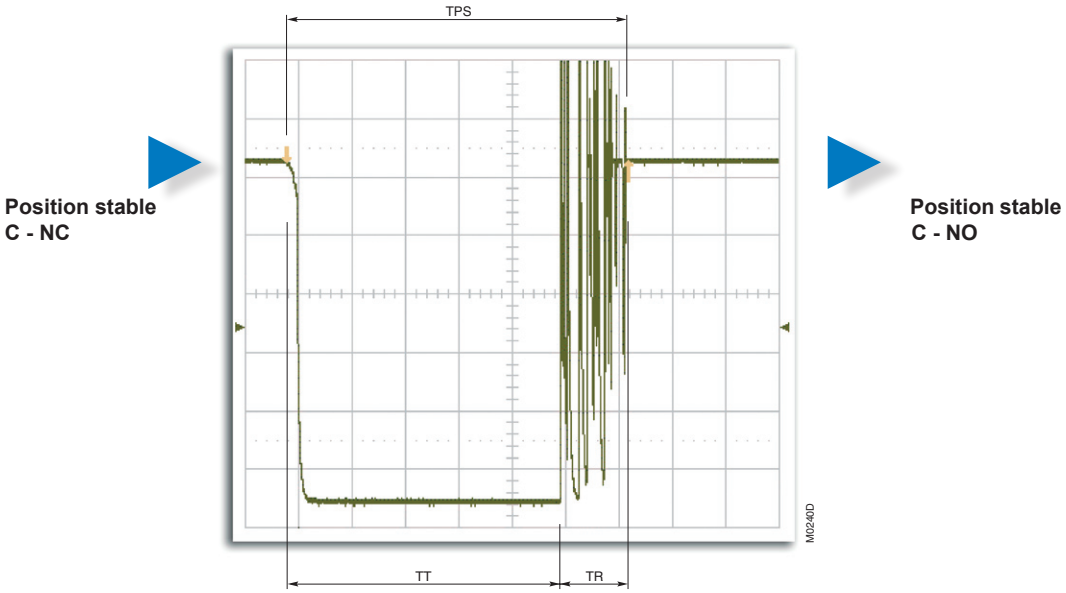

Product service life

Mechanical endurance

This is the number of switching operations a microswitch or limit switch can perform without an electrical load. Product failure is characterized by mechanical wear leading to a deviance of one or more performance levels outside the allowed tolerance limits, or of the incapacity to ensure the product's basic function, i.e. switching.

This performance level depends on the environmental conditions in which the product is used: vibrations, type and frequency of operation, temperature, harshness of the environment, etc.

The performance levels published in this catalogue were obtained in normal pressure and temperature atmospheric conditions, with an over-travel set at 80% of the maximum allowable and an operating cadence of 10 to 30 cycles per minute.

Electrical endurance

The material used for the contact elements and, more importantly, the type of electrical load are key factors for a product's electrical service life.

- **Resistive load:** this is the ideal situation for a Microswitch (Cos φ = 1 for alternating current).
- **Inductive load:** overcurrents appear due to the presence of a coil, thus causing the contacts to deteriorate more quickly than for the previous case. The performance levels of our products are those when subjected to the following conditions:
  - Cos $\varphi \geq 0.3$, 0.5 or 0.8 for alternating current,
  - L/R $\leq$ 5 ms or 40 ms for direct current.
- **"Low level" load:** this is characterised by a current of a few milliamperes generally combined with a voltage of a few volts. In this case, the electrical service life of the product approaches its mechanical service life. This type of load, due to the levels present, is very sensitive to environmental conditions: potential contact pollution, etc.
  In such cases, we recommend the use of encapsulated Microswitches, or even the insertion of a load resistance (dummy load) in parallel with the "real" load to increase the switched current.

For product validation or during qualification, we carry out electrical endurance testing at operating temperature in order to cover the extremities of the potential operating range of the equipment, by using the customer's specific specification and/or reference standards. Example: for an objective of 100,000 switching cycles: 10,000 cycles at ambient temperature, 10,000 cycles at the minimum temperature and 80,000 cycles at maximum temperature..

Terminology - Operating diagram

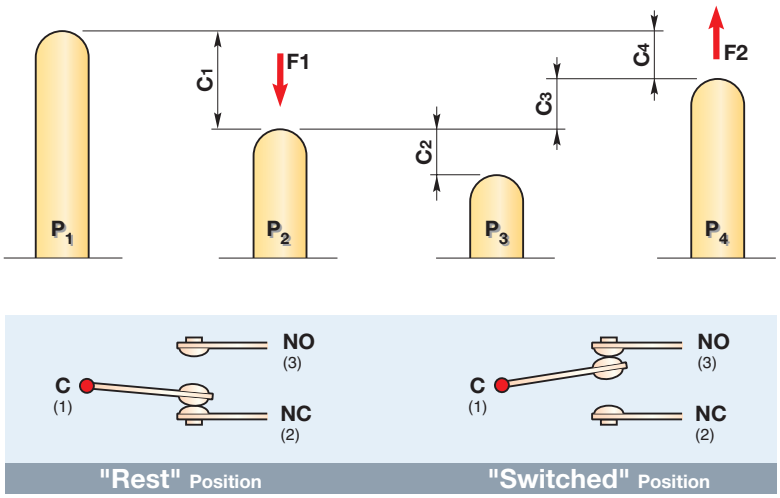

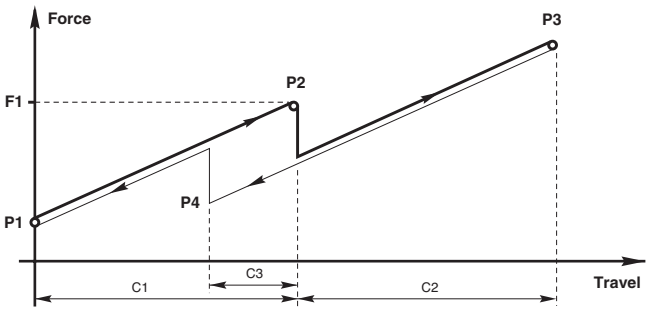

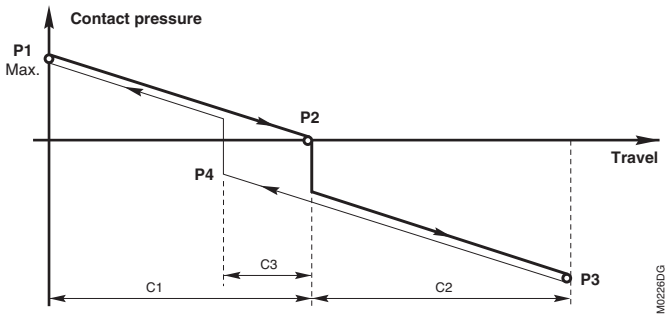

Extracts from NF C 93-415 standard

P1 **Rest position:** "position of the actuator or auxiliary actuator when no external mechanical force is applied to it".

P2 **Switching position:** "position of the actuator or auxiliary actuator at the moment when an increasing force causes the snap-action mechanism to operate".

– **Switched position:** "intermediate position between the switching position (**P2**) and the travel limit position (**P3**) which uses at least 50% of the over-travel (**C2**) beyond the switching position (**P2**)".

P3 **Total travel position:** "position of the actuator or auxiliary actuator when an increasing applied force displaces it to the effective limits of the allowable travel". (Overtravel limit position)

P4 **Release position:** "position of the actuator or auxiliary actuator at the moment when a decreasing force enables the snap-action mechanism to return to its initial electrical state".

F1 **Operating force:** "force to be applied to the actuator or auxiliary actuator to displace the latter from the rest position (**P1**) to the switching position (**P2**)".

F2 **Release force:** "value to which the operating force (**F1**) must be reduced to allow the actuator to return to its release position (**P4**)"

C1 **Pretravel:** "distance between the rest position (**P1**) and the switching position (**P2**)".

C2 **Overtravel** beyond the switching position: "distance between the switching position (**P2**) and the total travel position (**P3**)".

Note: this is the maximum allowable value which must not be exceeded otherwise the inner mechanism of the Microswitch will be subject to abnormal wear.

– **Total travel:** "sum of the pretravel (**C1**) and the overtravel beyond the switching position (**C2**)".

C3 **Differential movement:** "distance between the switching position (**P2**) and the release position (**P4**)".

C4 **Overtravel** beyond the release position: "distance between the release position (**P4**) and the rest position (**P1**)".

Examples of actuators

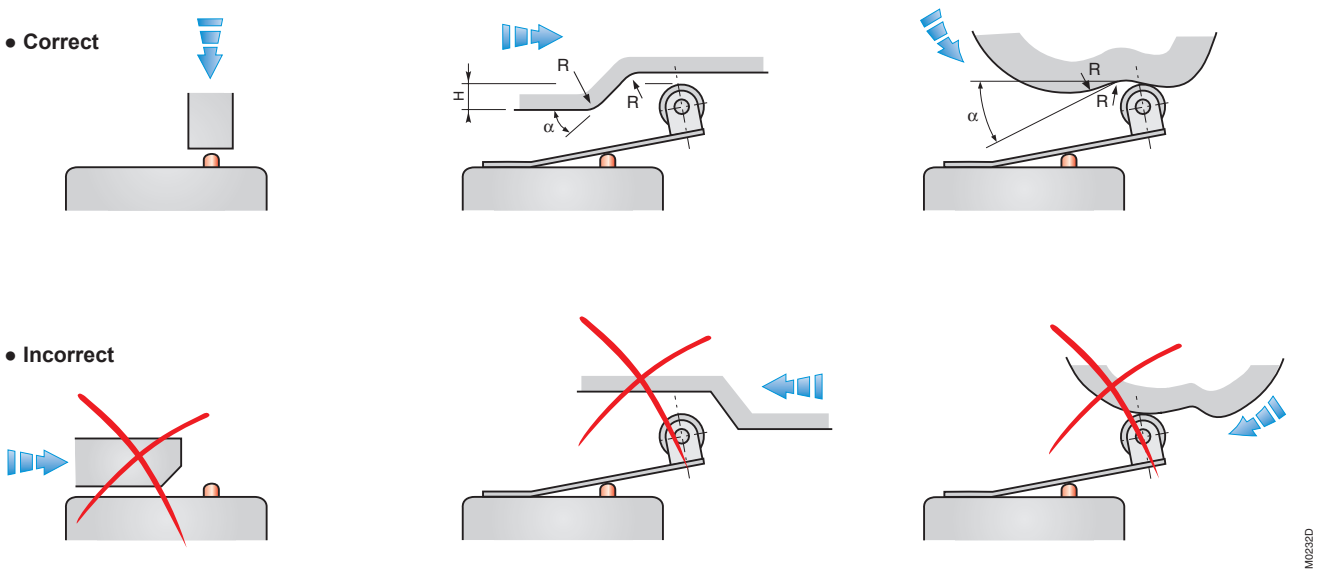

Actuator Accesories

Definition extracts from NF C 93-415

Actuator: "element forming an integral part of the switch upon which an external mechanical force is applied. The movement of the actuator causes the snap-action switching mechanism to operate".

Auxiliary actuator: "adapter designed to be fitted to a switch or a group of precision switches enabling it/them to be operated by means not adapted to its/their direct operation.

The table below gives typical uses.

		Rotary cam	Ramp : 2 movement directions	Ramp : 1 movement direction	Lever	Telescopic plunger	Coin
Simple pin plunger						x	
Telescopic plunger	Without roller					x	
	With roller	x	x	x	x		
Flexible lever	Without roller					x	
	With roller	x	x	x	x		
Direct-action articulated lever without roller	Long				x	x	x
	Short			x	x		
Inverted-action articulated lever with roller	Long	x	x	x	x		
	Short	x	x	x	x		
Wire rod actuator					x		x

Recommended design elements for definition of cams and ramps :

		General case	Limit switch
Connection radii	**mm**	R = roller radius / 2	R = roller radius / 2
Incline	**°**	α = 20° maxi.	35° < α < 60°
Cam lift	**mm**	H minimum = course d'approche + course résiduelle	5 < H < 30 mm
Operating speed	**m.s^{-1}**	0.02 m.s^{-1} < V < 0.10 m.s^{-1}	α = 35°, V = 0.20 m.s^{-1} α = 60°, V = 0.35 m.s^{-1}

Order Reference

Indicate either the **Order code** or the **Type** when ordering.
Further details are added to this reference in certain cases: position and form of the control lever if it is to be factory fitted. This is the reason why this Order code and the types in the "Ordering details" tables contain boxes ☐ to be filled out
.

Packaging

Depending on the size and quantities ordered, our products may be individually or group packaged. A label fixed to the packaging specifies the reference and quantity of its contents.
Group packaging is used for delivery purposes.

The mass and identification number always correspond to a single part unless otherwise stated.

Unless specified, screws are not inclued with the accessories.

Recommendation for users

Assembly and operation

- Never stress the plunger in the rest position since at that point the operating blade is already flexed and the contact pressure reduced.
- Never work near the switching point (at the pretravel limit). Contact pressure is low and, in the event of vibrations or shocks to the system to which the microswitch is fitted, there would be a risk of spurious separations between the moving and fixed contacts, and hence fleeting breaks in the electrical circuit.
- Do not use the release force to return the actuator.
- Respect the 80% of overtravel value specified in the technical documents in order to obtain good contact pressure and to avoid abnormal wear of the elastic mechanism.
- Although the system consists of a snap-action mechanism, a slow operating speed is not recommended as the elastic system could in spite of everything reach a point of equilibrium, resulting in the separation of the moving contact from the two fixed contacts, thereby interrupting the electrical circuit.
- The actuators must remain in contact with the transmission elements (plunger, lever, roller, etc.) throughout the full operating travel period, as well as when in the "rest" position.
- When fitting the devices, respect the recommended screw tightening torque and use a flat washer and a serrated locking washer.
- The use of an insulating plate is recommended if the microswitch is to be fitted against a metal face.
- For devices with non-compounded outputs (solder terminals, etc.), the terminals should be protected against direct contact.

Electrical recommendations

Never use the same device simultaneously on two different circuits: auxiliary current and power current.

Indeed:

– the switching of power currents erodes the contacts and tends to increase contact resistance.
– the switching of auxiliary currents requires clean, non-oxidised contacts and high contact pressure (avoid using devices with a low operating force). Likewise, the switching of low voltages does not allow the electric arc to perforate insulating impurity layers that may have formed on the surface of the fixed contacts.

Cabling

- For microswitches with solder terminals, use a soldering iron with a maximum power rating of 30W and a solder alloy (tin based) with a non-corrosive flux if possible. Be sure to clean any excess flux and, for products that are not hermetically sealed, to avoid the flux spreading up the terminals so as not to pollute the contacts.
- Avoid excessive bending of cables. Consult us if necessary.

Other elements

Certain products, particularly limit switches, have specific fitting and setting instructions. These documents are available on request.
"**F…**" limit switches are factory adjusted and require no adjustment or intervention during installation. Opening the casing is forbidden and cancels all guarantees.

Storage Conditions

General conditions

- The devices must be stored in a sheltered place and in their original primary packaging.
- The relative humidity level must not exceed 80%.
- The maximum storage period is two (2) years.
- The storage temperature must be within the limits specified in the table on next page, according to product type.

Storage Conditions (continued)

Product type	Family including all derived products	Storage temperature limits
Encapsulated Microswitch	T3, G3, R	-5 °C ... +55 °C
Protected Microswitch	Z, H et interrupteurs	-5 °C ... +40 °C
Protected Microswitch	C, HL, HP, M, CM	-5 °C ... +40 °C
Watertight Microswitch	Z3_E, IE	-5 °C ... +40 °C
Limit switch	F2, F3	-5 °C ... +55 °C
Limit switch	FCE	-20 °C ... +70 °C
Ellapsed time indicator	CM52xx	-5 °C ... +55 °C -55 °C ... +100 °C during 2000 hours

For "fitted" devices
If subassemblies or equipment in which microswitches or limit switches have been integrated must be stored, **the protection and packaging must be at least equivalent to that of the original**.

Testing before use
After a long storage period, and before use, it is recommended that a cursory operating test be carried out as described below:
– manually action the actuator (lever, telescopic plunger, etc.) until switching occurs, then release it,